ELITE SERIES COMMERCIAL HIGH-TRAFFIC
AC SLIDE GATE OPERATOR

INSTALLATION MANUAL

Model **SL3000UL**

OPERATOR REQUIRES A LIFTMASTER EXTERNAL MONITORED ENTRAPMENT PROTECTION DEVICE BE INSTALLED IN ALL ENTRAPMENT ZONES



- THIS PRODUCT IS TO BE INSTALLED AND SERVICED BY A TRAINED GATE SYSTEMS TECHNICIAN ONLY.
- This model is for use on vehicular passage gates ONLY and not intended for use on pedestrian passage gates.
- This model is intended for use in Class I, II, III and IV vehicular slide gate applications.
- Visit LiftMaster.com to locate a professional installing dealer in your area.
- This gate operator is compatible with MyQ® and Security+ 2.0® accessories.

SL3000101UL
1 HP Single Phase

SL3000501UL
1/2 HP Single Phase

Access installation and technical support guides or register this product

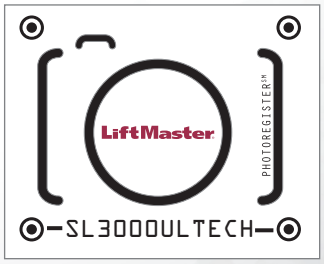

1. **Take a photo** of the camera icon including the points (◎).
2. **Send it in** by texting the photo to 71403.

c UL us LISTED

LiftMaster
300 Windsor Drive
Oak Brook, IL 60523

LiftMaster® ELITE SERIES®

TABLE OF CONTENTS

SAFETY 1
Safety Symbol and Signal Word Review 2
Usage Class 3
UL325 Entrapment Protection Requirements 3
Safety Installation Information 4
Gate Construction Information 5

INTRODUCTION 6
Carton Inventory 6
Operator Specifications 7
Site Preparation 8

INSTALLATION 9
Types of Installations 9
Step 1 Determine Location for Operator 10
Step 2 Install the Operator 11
Step 3 Attach the Chain 12
Step 4 Install Entrapment Protection 13
Step 5 Earth Ground Rod 15
Step 6 Power Wiring 15
Step 7 Dual gate setup 17
Step 8 install the cover 18

ADJUSTMENT 19
Adjust the Handing and Limits 19
Fine Tune the Force 20
Obstruction Test 20

OPERATOR OVERVIEW 21

CONTROL BOARD OVERVIEW 22
Learn Button 23
Diagnostic Display 23
Handing Buttons 23
Bipart Delay 23
Timer-to-Close (TTC) 23
Reversal Force Dial 24
Test Buttons 24
Status LEDs 24

WIRE ACCESSORIES TO CONTROL BOARD 25
Three Button Control Station 25
Fire Department 25
Loops 25
Photoelectric Sensors and Edge Sensors 26
Locks 26

EXPANSION BOARD OVERVIEW 27
Exit Fail Switch 27
AC Fail Switch 27
Anti Tail Switch 27
Quick Close Switch 27
Auxiliary Relay 1 and 2 28

WIRE ACCESSORIES TO EXPANSION BOARD 29
Photoelectric Sensors and Edge Sensors 29
Control Station 29
Loops 30

ADDITIONAL WIRING 30
SAMS Wiring With Relays Not Energized 30
Field Wiring 31

PROGRAMMING 32
Remote Controls (Not Provided) 32
LiftMaster Internet Gateway (not provided) 33
Constant Pressure Override (CPO) 33
Gate hold open feature 33
Erase All Codes 33
To Remove and Erase Monitored Entrapment Protection Devices 33

SETTINGS 34
Gate Operator Setup Examples 34
Dual Gate Settings 35

MAINTENANCE 36
Important Safety Instructions 36
Maintenance Chart 36

TROUBLESHOOTING 37
Diagnostic Codes 37
Diagnostic Codes Table 38
Operator Alarm 40
Troubleshooting Chart 41

ACCESSORIES 43

REPAIR PARTS 45

WARRANTY 46

SAFETY

Safety Symbol and Signal Word Review

When you see these Safety Symbols and Signal Words on the following pages, they will alert you to the possibility of ***Serious Injury or Death*** if you do not comply with the warnings that accompany them. The hazard may come from something mechanical or from electric shock. Read the warnings carefully.

When you see this Signal Word on the following pages, it will alert you to the possibility of damage to your gate and/or the gate operator if you do not comply with the cautionary statements that accompany it. Read them carefully.

IMPORTANT NOTE:

- *BEFORE attempting to install, operate or maintain the operator, you must read and fully understand this manual and follow all safety instructions.*
- *DO NOT attempt repair or service of your gate operator unless you are an Authorized Service Technician.*

⚠ WARNING

MECHANICAL

⚠ WARNING

ELECTRICAL

⚠ CAUTION

WARNING: This product can expose you to chemicals including lead, which are known to the State of California to cause cancer or birth defects or other reproductive harm. For more information go to *www.P65Warnings.ca.gov*.

SAFETY

Usage Class

Class I - Residential Vehicular Gate Operator

A vehicular gate operator (or system) intended for use in garages or parking areas associated with a residence of one-to four single families.

Class II - Commercial/General Access Vehicular Gate

A vehicular gate operator (or system) intended for use in a commercial location or building such as a multi-family housing unit (five or more single family units), hotel, garages, retail store, or other buildings accessible by or servicing the general public.

Class III - Industrial/Limited Access Vehicular Gate

A vehicular gate operator (or system) intended for use in an industrial location or building such as a factory or loading dock area or other locations not accessible by or intended to service the general public.

Class IV - Restricted Access Vehicular Gate Operator

A vehicular gate operator (or system) intended for use in a guarded industrial location or building such as an airport security area or other restricted access locations not servicing the general public, in which unauthorized access is prevented via supervision by security personnel.

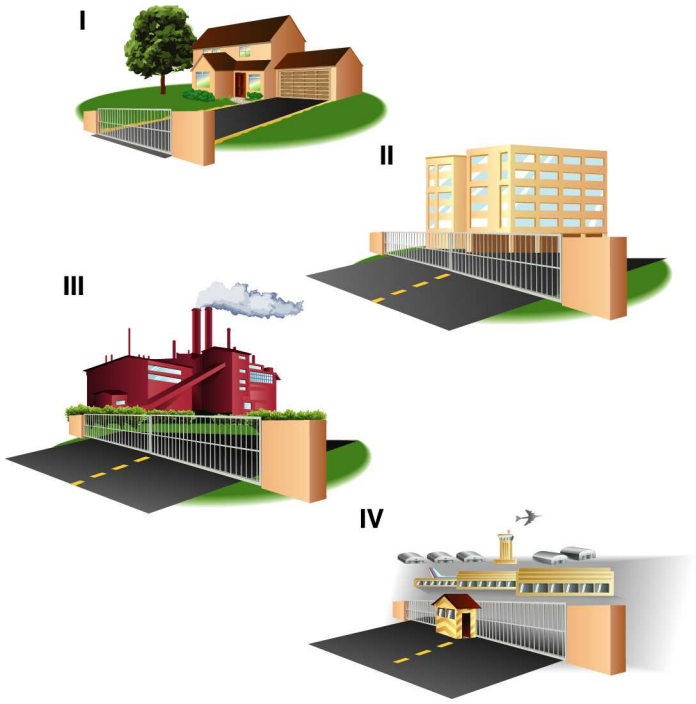

UL325 Entrapment Protection Requirements

- A **minimum of two** independent* monitored entrapment protection devices are required to be installed at each entrapment zone
- Every installation is unique. It is the responsibility of the installer to install external monitored entrapment protection devices in **each entrapment zone**
- This vehicular slide gate operator will operate only after installation of a **minimum of two** independent* monitored entrapment protection devices in each direction; two in the open direction and two in the close direction.
- Entrapment protection device types include inherent (built into the operator), monitored external photoelectric sensors or monitored external edge sensors
- This operator is provided with an inherent entrapment protection device built into the operator that serves as one of the two independent devices

* Independent - the same type of device shall NOT be used for both entrapment protection devices.

IMPORTANT SAFETY INSTRUCTIONS

⚠ WARNING

To reduce the risk of INJURY or DEATH:

- READ AND FOLLOW ALL INSTRUCTIONS.
- NEVER let children operate or play with gate controls. Keep the remote control away from children.
- ALWAYS keep people and objects away from the gate. NO ONE SHOULD CROSS THE PATH OF THE MOVING GATE.
- Test the gate operator monthly. The gate MUST reverse on contact with an object or reverse when an object activates the noncontact sensors. After adjusting the force or the limit of travel, retest the gate operator. Failure to adjust and retest the gate operator properly can increase the risk of INJURY or DEATH.
- Use the emergency release ONLY when the gate is not moving.
- KEEP GATES PROPERLY MAINTAINED. Read the owner's manual. Have a qualified service person make repairs to gate hardware.
- The entrance is for vehicles ONLY. Pedestrians MUST use separate entrance.
- **SAVE THESE INSTRUCTIONS.**

Safety Installation Information

1. Vehicular gate systems provide convenience and security. Gate systems are comprised of many component parts. The gate operator is only one component. Each gate system is specifically designed for an individual application.
2. Gate operating system designers, installers and users must take into account the possible hazards associated with each individual application. Improperly designed, installed or maintained systems can create risks for the user as well as the bystander. Gate systems design and installation must reduce public exposure to potential hazards.
3. A gate operator can create high levels of force in its function as a component part of a gate system. Therefore, safety features must be incorporated into every design. Specific safety features include:
   - Edges Sensors (contact)
   - Guards for Exposed Rollers
   - Photoelectric Sensors
   - Screen Mesh
   - Vertical Posts
   - Instructional and Precautionary Signage
4. Install the gate operator only when:
   a. The operator is appropriate for the construction and the usage class of the gate.
   b. All openings of a horizontal slide gate are guarded or screened from the bottom of the gate to a minimum of 6 feet (1.8 m) above the ground to prevent a 2-1/4 inches (6 cm) diameter sphere from passing through the openings anywhere in the gate, and in that portion of the adjacent fence that the gate covers in the open position.
   c. All exposed pinch points are eliminated or guarded, and guarding is supplied for exposed rollers.
5. The operator is intended for installation only on gates used for vehicles. Pedestrians must be supplied with a separate access opening. The pedestrian access opening shall be designed to promote pedestrian usage. Locate the gate such that persons will not come in contact with the vehicular gate during the entire path of travel of the vehicular gate.
6. The gate must be installed in a location so that enough clearance is supplied between the gate and adjacent structures when opening and closing to reduce the risk of entrapment.
7. The gate must be properly installed and work freely in both directions prior to the installation of the gate operator.
8. Permanently mounted access controls intended for users to activate, must be located at least 6 feet (1.8 m) away from any moving part of the gate and where the user is prevented from reaching over, under, around or through the gate to operate the controls. Outdoor or easily accessible controls shall have a security feature to prevent unauthorized use. Exception: Emergency access controls only accessible by authorized personnel (e.g. fire, police) may be placed at any location in the line-of-sight of the gate.
9. The Stop and/or Reset (if provided separately) must be located in the line-of-sight of the gate. Activation of the reset control shall not cause the operator to start.
10. A minimum of two (2) WARNING SIGNS shall be installed in the area of the gate. Each placard is to be visible by persons located on the side of the gate on which the placard is installed.
11. For a gate operator utilizing a non-contact sensor:
    a. Reference owner's manual regarding placement of non-contact sensor for each type of application. See Install Entrapment Protection section.
    b. Care shall be exercised to reduce the risk of nuisance tripping, such as when a vehicle trips the sensor while the gate is still moving.
    c. One or more non-contact sensors shall be located where the risk of entrapment or obstruction exists, such as the perimeter reachable by a moving gate or barrier.
12. For a gate operator utilizing a contact sensor such as an edge sensor:
    a. One or more contact sensors shall be located where the risk of entrapment or obstruction exists, such as at the leading edge, trailing edge and post mounted both inside and outside of a vehicular horizontal slide gate.
    b. A hard wired contact sensor shall be located and its wiring arranged so the communication between the sensor and the gate operator is not subject to mechanical damage.
    c. A wireless device such as one that transmits radio frequency (RF) signals to the gate operator for entrapment protection functions shall be located where the transmission of the signals are not obstructed or impeded by building structures, natural landscaping or similar obstruction. A wireless device shall function under the intended end-use conditions.

Gate Construction Information

Vehicular gates should be installed in accordance with ASTM F2200: Standard Specification for Automated Vehicular Gate Construction. For a copy, contact ASTM directly at 610-832-9585 or www.astm.org.

1. General Requirements

1.1 Gates shall be constructed in accordance with the provisions given for the appropriate gate type listed, refer to ASTM F2200 for additional gate types.

1.2 Gates shall be designed, constructed and installed to not fall over more than 45 degrees from the vertical plane, when a gate is detached from the supporting hardware.

1.3 Gates shall have smooth bottom edges, with vertical bottom edged protrusions not exceeding 0.50 inches (12.7 mm) when other than the exceptions listed in ASTM F2200.

1.4 The minimum height for barbed tape shall not be less than 8 feet (2.44 m) above grade and for barbed wire shall not be less than 6 feet (1.83 m) above grade.

1.5 An existing gate latch shall be disabled when a manually operated gate is retrofitted with a powered gate operator.

1.6 A gate latch shall not be installed on an automatically operated gate.

1.7 Protrusions shall not be permitted on any gate, refer to ASTM F2200 for Exceptions.

1.8 Gates shall be designed, constructed and installed such that their movement shall not be initiated by gravity when an automatic operator is disconnected, in accordance with the following.

1.8.1 Vehicular horizontal slide gate. Shall not result in continuous, unimpeded movement in either lineal direction of its travel.

1.9 For pedestrian access in the vicinity of an automated vehicular gate, a separate pedestrian gate shall be provided. The pedestrian gate shall be installed in a location such that a pedestrian shall not come in contact with a moving vehicular access gate. A pedestrian gate shall not be incorporated into an automated vehicular gate panel.

2. Specific Applications

2.1 Any non-automated gate that is to be automated shall be upgraded to conform to the provisions of this specification.

2.2 This specification shall not apply to gates generally used for pedestrian access and to vehicular gates not to be automated.

2.3 When the gate operator requires replacement, the existing gate shall be upgraded to conform to the provisions of this specification.

2.4 When the gate of an automated gate system requires replacement, the new gate shall conform to the provisions of this specification.

3. Vehicular Horizontal Slide Gates

3.1 The following provisions shall apply to Class I, Class II and Class III vehicular horizontal slide gates:

3.1.1 All weight bearing exposed rollers 8 feet (2.44 m), or less, above grade shall be guarded or covered.

3.1.2 All openings shall be designed, guarded, or screened from the bottom of the gate to the top of the gate or a minimum of 6 ft. (1.83 m) above grade, whichever is less, to prevent a 2 1⁄4 in. (57 mm) diameter sphere from passing through the openings anywhere in the gate, and in that portion of the adjacent fence that the gate covers in the open position. The gate panel shall include the entire section of the moving gate,including any back frame or counterbalance portion of the gate.

3.1.3 A gap, measured in the horizontal plane parallel to the roadway, between a fixed stationary object nearest the roadway, (such as a gate support post) and the gate frame when the gate is in either the fully open position or the fully closed position, shall not exceed 2 1/4 inches (57 mm). Exception: All other fixed stationary objects greater than 16 in. (406 mm) from the gate frame shall not be required to comply with this section.

3.1.4 Positive stops shall be required to limit travel to the designed fully open and fully closed positions. These stops shall be installed at either the top of the gate, or at the bottom of the gate where such stops shall horizontally or vertically project no more than is required to perform their intended function.

3.1.5 All gates shall be designed with sufficient lateral stability to assure that the gate will enter a receiver guide, refer to ASTM F2200 for panel types.

3.2 The following provisions shall apply to Class IV vehicular horizontal slide gates:

3.2.1 All weight bearing exposed rollers 8 feet (2.44 m), or less, above grade shall be guarded or covered.

3.2.2 Positive stops shall be required to limit travel to the designed fully open and fully closed positions. These stops shall be installed at either the top of the gate, or at the bottom of the gate where such stops shall horizontally or vertically project no more than is required to perform their intended function.

INTRODUCTION

Carton Inventory

NOT SHOWN: Documentation Packet, Chain #41 - 25 feet, Eye Bolt Kit

Tools Needed

1/2" wrench for cover screw 5/16", 3/4" wrench for 1/2" concrete anchors, Screwdrivers (phillips head and flat head), Cable cutters and strippers

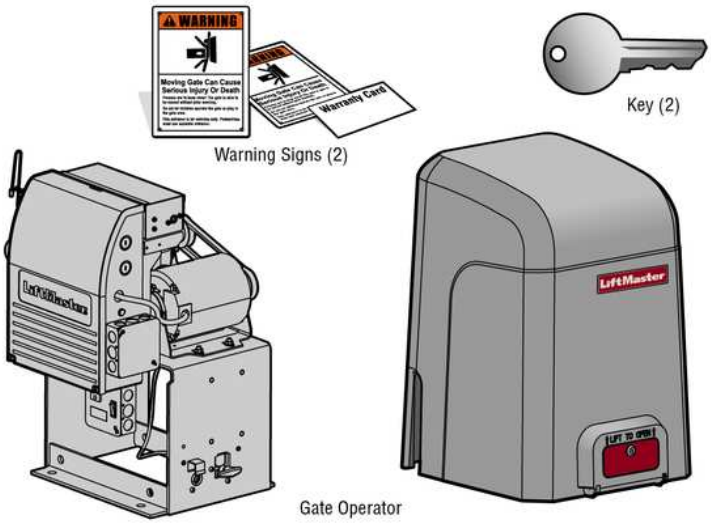

Warning Signs (2)

Key (2)

Gate Operator

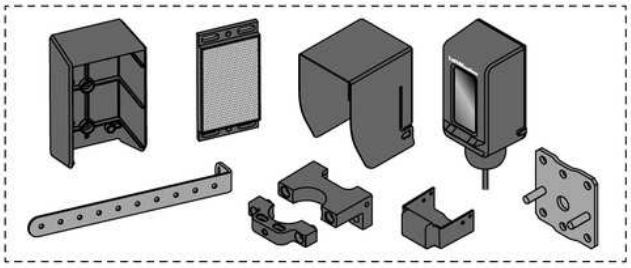

LiftMaster Monitored Retro-Reflective Photoelectric Sensor Model LMRRUL

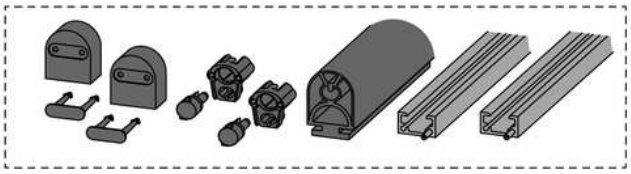

5 ft. Edge sensor kit

INTRODUCTION

Operator Specifications

Usage Classification	Class I, II, III, & IV
Main AC Supply	**Model SL3000501UL 1/2 HP:** 120 Vac, 6 Amps (12 Amps including accessory outlets) **Model SL3000101UL 1 HP:** 120 Vac, 12 Amps (18 Amps including accessory outlets) When Optional Transformer Kit Model 3PHCONV is installed in the field, operator is rated 208/240/480/575 VAC, 4.8/4.2/2.1/1.7 A, 60 Hz, 1 PH
Accessory Power	24 Vdc, 500 mA max. for ON + SW (switched)
Maximum Gate Weight	**Model SL3000501UL 1/2 HP:** 1000 lbs. (453.6 kg) **Model SL3000101UL 1 HP:** 2000 lbs. (907.2 kg)
Minimum Gate Travel Distance	4 feet (1.2 m)
Maximum Gate Travel Distance	52 feet (15.85 m)
Maximum Gate Travel Speed	1 foot/second
Maximum Daily Cycle Rate	Continuous
Maximum Duty Cycle	Continuous
Operating Temperature	Without Heater: -20°C to 60°C (-4°F to 140°F) With Optional Heater: -40°C to 60°C (-40°F to 140°F)
Expansion Board	Provided
External Entrapment Protection Device Inputs (non-contact and/or contact)	Main board - up to 2 close entrapment protection devices and 1 open entrapment protection device. Expansion board - up to 3 entrapment protection devices configurable to either close or open and up to 4 edge sensors using wireless edge sensor kit model LMWEKITU .

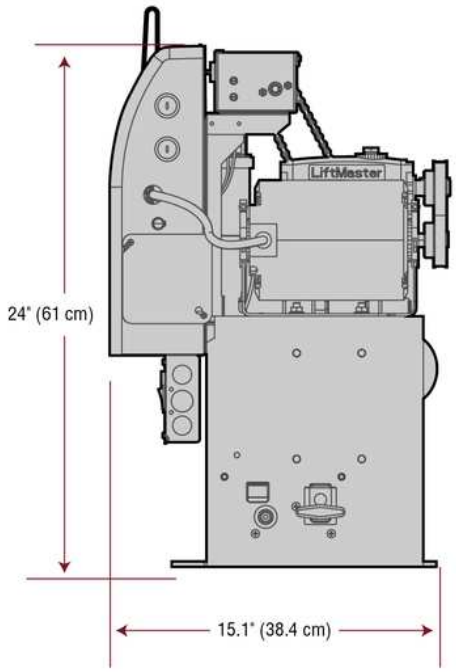

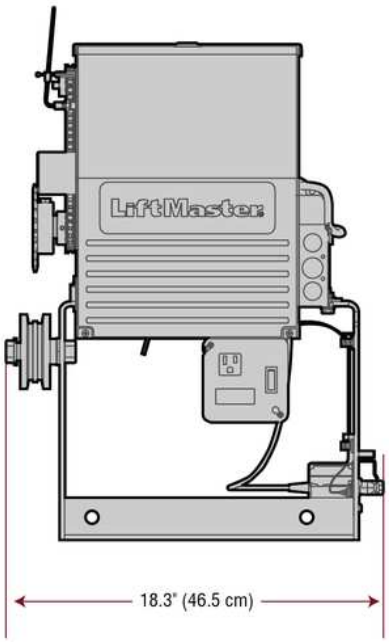

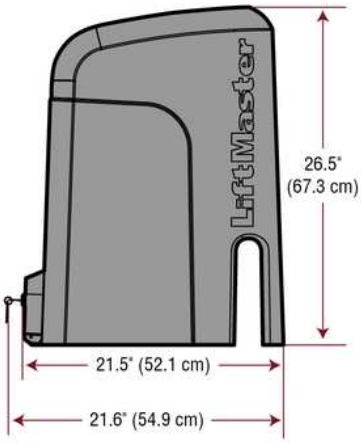

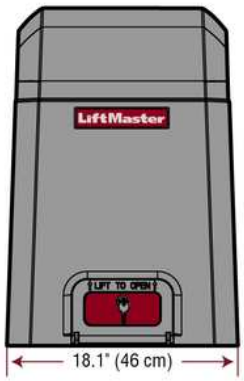

Site Preparation

Check the national and local building codes **BEFORE** installation.

Conduit and Concrete Pad

Trench and install conduit. Before trenching, contact underground utility locating companies. Conduit must be UL approved for low and high voltage. Consider the operator placement BEFORE installing the pad or post.



Safety

Entrapment protection devices are required to protect against any entrapment or safety conditions encountered in your gate application. Install a warning sign (two provided) on the inside and outside of the property, where easily visible.



Gate

Gate must be constructed and installed according to ASTM F2200 standards (refer to page 4). Gate must fit specifications of operator (refer to specifications).

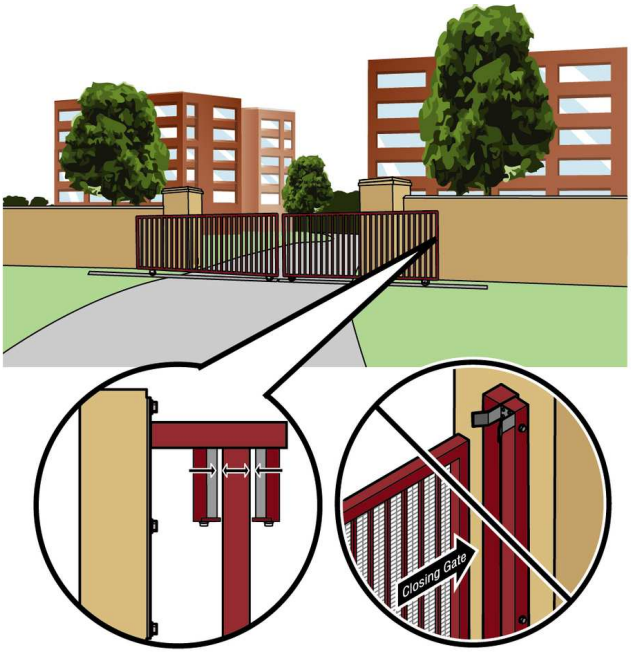

SAFETY CATCH ROLLERS
Install catch rollers with safety covers on the side of a post or wall with a minimal distance of half an inch between the rollers and gate

DO NOT use a gate catch post. Because the coasting distance may vary due to changes in temperature, it is NOT recommended to install a catch post in front of the gate's path. To do so will cause the gate to hit the post in certain instances.

Additional Accessories

The vehicle loops allow the gate to stay open when vehicles are obstructing the gate path. Suggested for vehicles 14 feet (4.27 m) or longer. Vehicle loops are not required but are recommended. Before installing your Access Control Device(s) be sure to complete a site survey and determine the best device for your site needs.

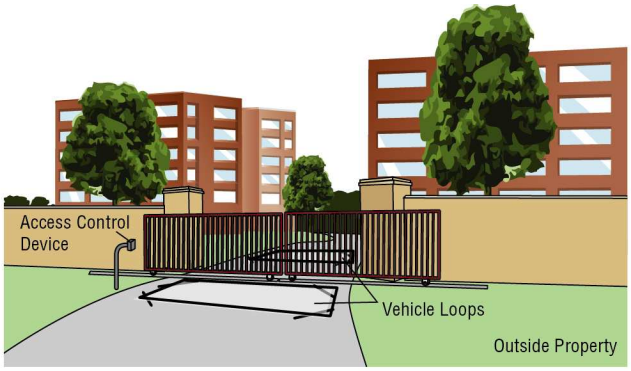

INSTALLATION

⚠CAUTION

- To AVOID damaging gas, power or other underground utility lines, contact underground utility locating companies BEFORE digging more than 18 inches (46 cm) deep.
- DO NOT touch the heater when switch is on, heater may be hot.

Types of Installations

Standard Installation

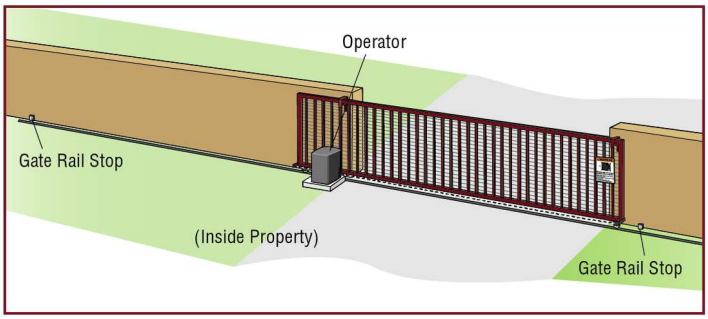

Rear Installation

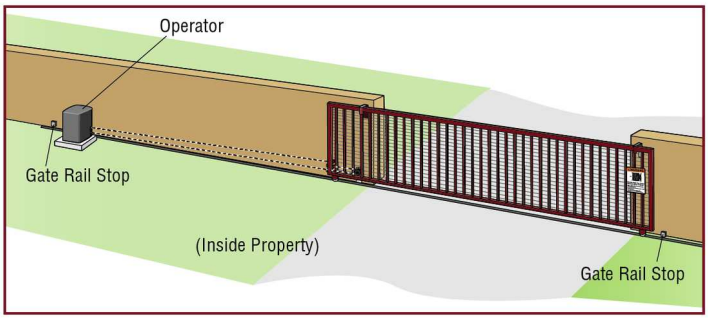

INSTALLATION

Step 1 Determine Location for Operator

Check the national and local building codes before installation.

Standard Installation

1. The gate operator should be installed near the front roller of the gate. Lay out the concrete pad.
2. Install the electrical conduit.
3. Pour a concrete pad (reinforced concrete is recommended).

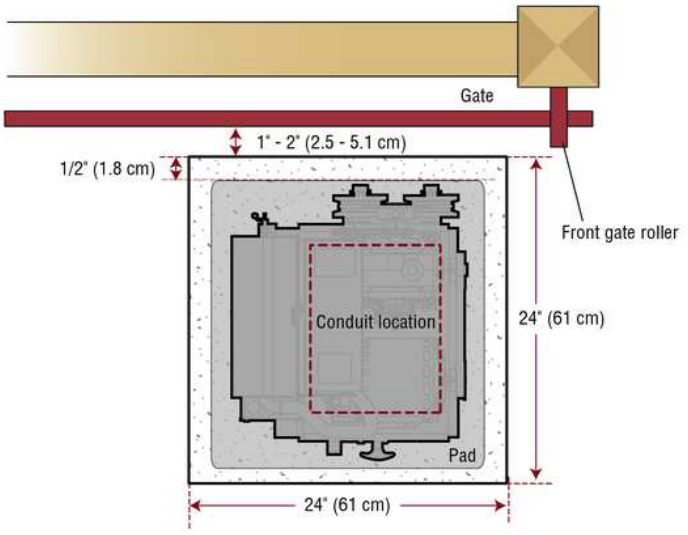

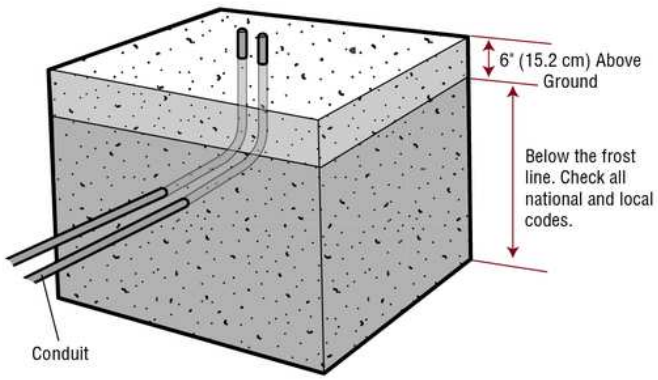

Rear Installation

1. The gate operator should be installed near the back of the gate in the OPEN position. Lay out the concrete pad.
2. Install the electrical conduit.
3. Pour a concrete pad (reinforced concrete is recommended).

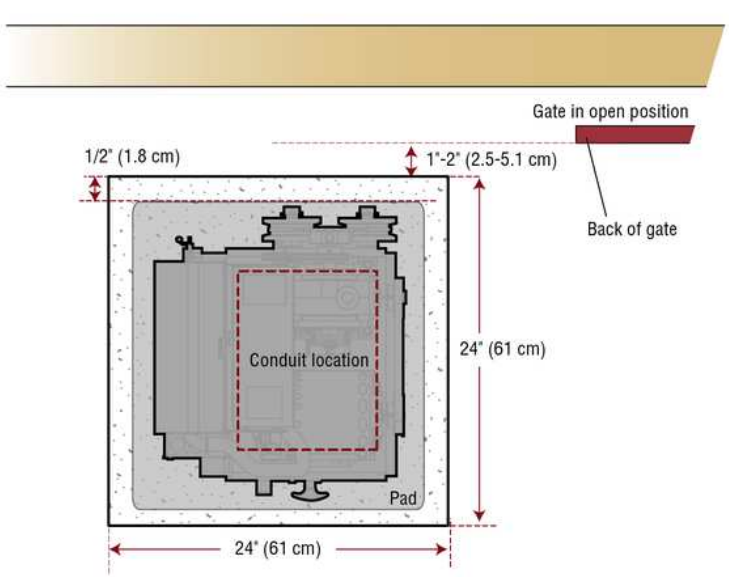

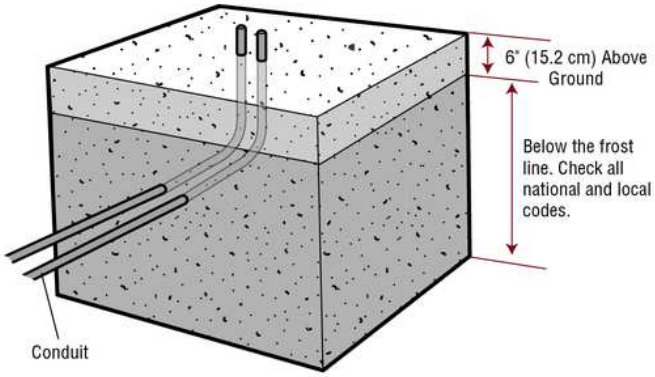

Step 2 Install the Operator

Attach the operator to the concrete pad with appropriate fasteners. The gate operator should be installed near the front roller of the gate or near the back of the gate (in the OPEN position). The space between the gate and the output sprocket must be a minimum of 4 inches (10.2 cm).

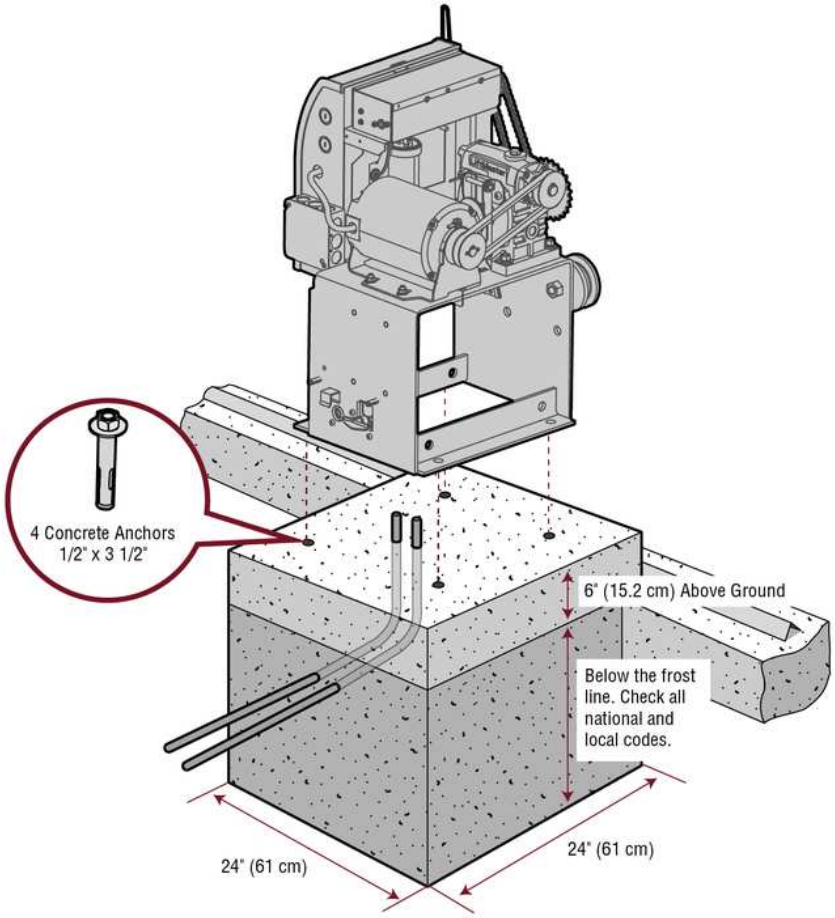

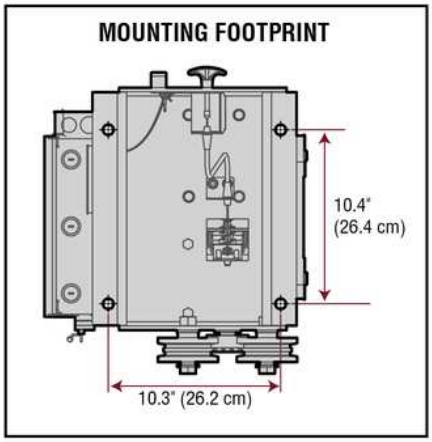

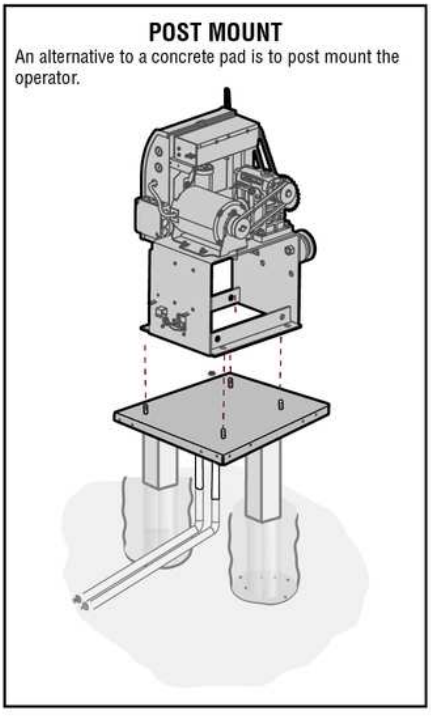

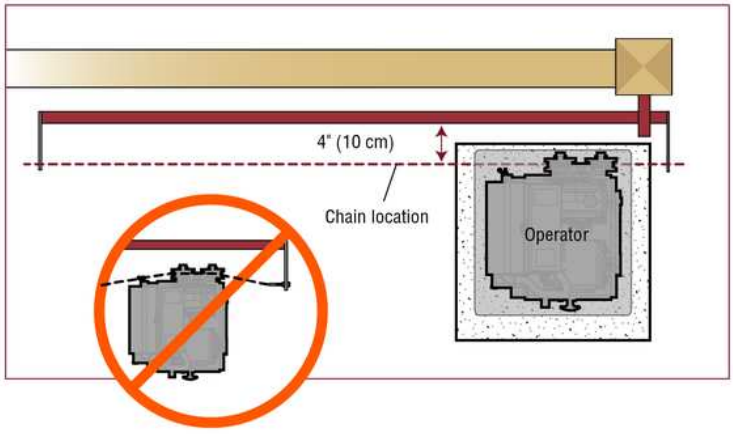

Step 3 Attach the Chain

Standard Installation

DO NOT run the operator until instructed.

1. Manually open the gate and line up the front bracket so the chain will be level with the idler pulley and parallel to the ground. Weld the front bracket in this position.
2. Manually close the gate and line up the rear bracket so the chain will be level with the idler pulley and parallel to the ground. Weld the rear bracket in this position.
3. Route the chain through the operator.
4. Connect the chain to the brackets using the eye bolt hardware. Chain should not be too tight or have excessive slack.
5. Remove the pin from the vent plug on the gear box.

The chain should have no more than 1 inch (2.5 cm) of sag for every 10 feet (3 m) of chain length.

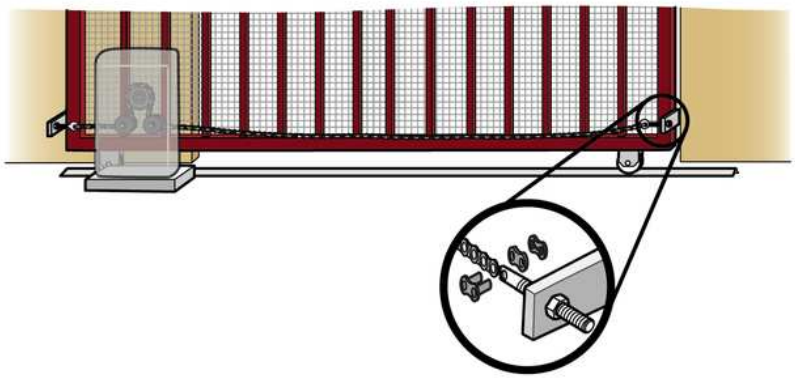

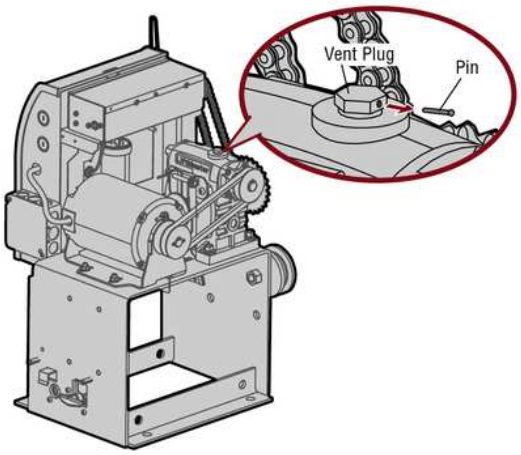

Rear Installation

DO NOT run the operator until instructed.

NOTE: *This installation will require two extra idler pulleys. Make sure all exposed pinch points are guarded. Refer to Gate Construction Information on page 4.*

1. Move the back pulley to the bottom hole in the operator.
2. Manually close the gate and align the bottom bracket so the chain will be level with the bottom idler pulley and parallel to the ground. Weld the bottom bracket in this position.
3. Align the top bracket so the chain will be level with the top idler pulley and parallel to the ground. Weld the upper bracket in this position.
4. Route the chain through the operator.
5. Connect the chain to the brackets using the eye bolt hardware. Chain should not be too tight or have excessive slack.
6. Remove the pin from the vent plug on the gear box (see above).

The chain should have no more than 1 inch (2.5 cm) of sag for every 10 feet (3 m) of chain length.

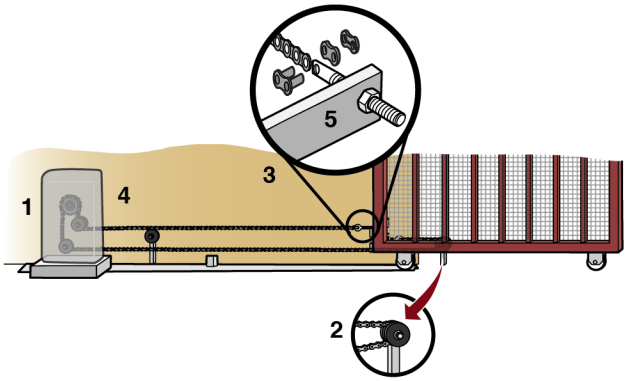

Idler Pulley MUST have safety cover.

⚠ WARNING

To prevent SERIOUS INJURY or DEATH from a moving gate:

- ALL gate operator systems REQUIRE two independent entrapment protection systems for each entrapment zone.
- Entrapment protection devices MUST be installed to protect anyone who may come near a moving gate.
- Locate entrapment protection devices to protect in BOTH the open and close gate cycles.
- Locate entrapment protection devices to protect between moving gate and RIGID objects, such as posts, walls, pillars, columns, or operator itself.

Step 4 Install Entrapment Protection

Entrapment protection MUST be installed according to the following UL 325 requirements:

- Slide gate operators require a **minimum of two** external monitored entrapment protection devices to function; one in the open direction and one in the close direction.
- Every installation is unique. It is the responsibility of the installer to ensure that ALL entrapment zones are protected with an external monitored entrapment protection device, protecting both the open and close gate cycles.
- **LiftMaster monitored external entrapment protection devices MUST be used with LiftMaster operators to meet UL325 requirements, see *Accessories*.**
- Test ALL entrapment protection devices after completing installation of the operator. For testing instructions, refer to the manual provided with your entrapment protection device.

Definitions

ENTRAPMENT: The condition when a person is caught or held in a position that increases the risk of injury.

SLIDE GATE ENTRAPMENT ZONE: An entrapment zone exists if at any point during travel, the gap between the gate and any opposing fixed edge or surface such as posts, walls, pillars, columns or operator itself, is less than 16" (406 mm) in a location up to 6 ft. (1.8 m) above grade.

Illustrations provided by DASMA Gate Systems Safety Guide

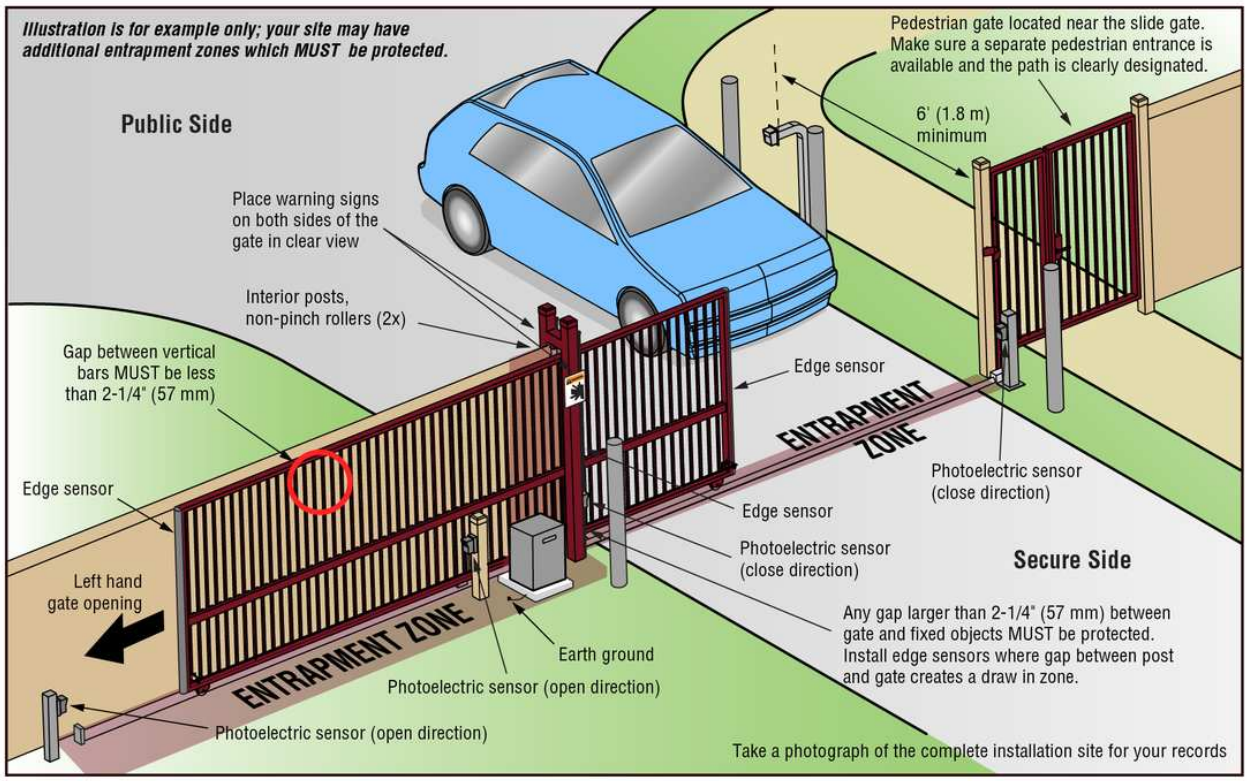

INSTALLATION

Wire Entrapment Protection Devices

There are three options for wiring the entrapment protection devices depending on the specific device and how the device will function. Refer to the specific entrapment protection device manual for more information. These entrapment protection device inputs are for monitored devices, which include pulsed photoelectric sensors, resistive edge sensors, and pulsed edge sensors. **Only one monitored entrapment protection device may be wired to each input.** Additional entrapment protection devices may be wired to the expansion board.

Control Board

CLOSES EYES/INTERRUPT

(2 Terminals) The CLOSE EYES/INTERRUPT input is for photoelectric sensor entrapment protection for the close direction. When an obstruction is sensed during gate closing the gate will open to the full open position and resets the Timer-to-Close. This input will be disregarded during gate opening.

CLOSE EDGE

(2 Terminals) The CLOSE EDGE input is for edge sensor entrapment protection for the close direction. When an obstruction is sensed during gate closing the gate will reverse to the full open position, disengaging the Timer-to-Close. This input will be disregarded during gate opening.

OPEN EYES/EDGE

(2 Terminals) The OPEN EYES/EDGE input is for photoelectric sensor or edge sensor entrapment protection for the open direction. When an obstruction is sensed during gate opening the gate will reverse for 4 seconds then stop. This input will be disregarded during gate closing.

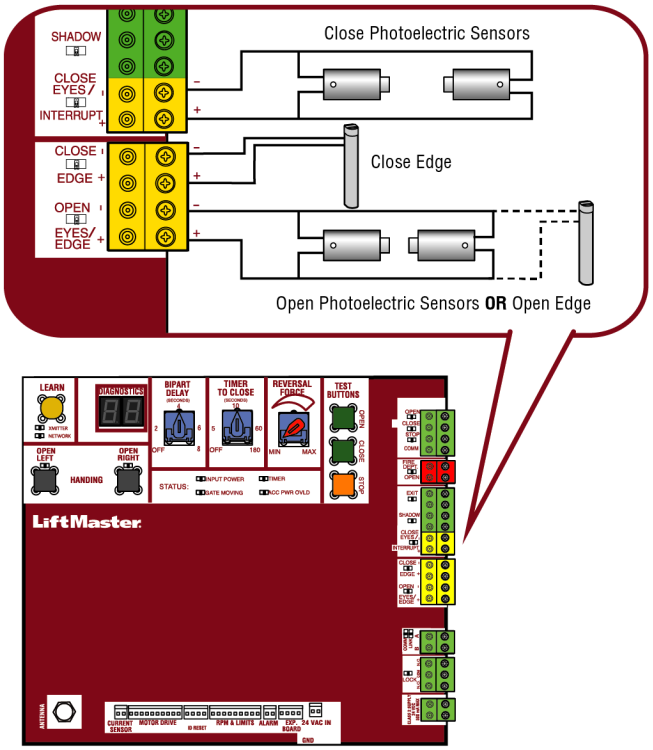

Expansion Board

EYE ONLY and COM

Open or Close Direction Photoelectric Sensors, the functionality is based on the switch settings (located next to the terminals)

Switch set to CLOSE: gate reverses fully when an obstruction is sensed

Switch set to OPEN: gate reverses 4 seconds when an obstruction is sensed

EYE/EDGE and COM

Open or Close Direction Photoelectric Sensors or Edge Sensor, the functionality is based on the switch settings (located next to the terminals)

Switch set to CLOSE: gate reverses fully when an obstruction is sensed

Switch set to OPEN: gate reverses 4 seconds when an obstruction is sensed

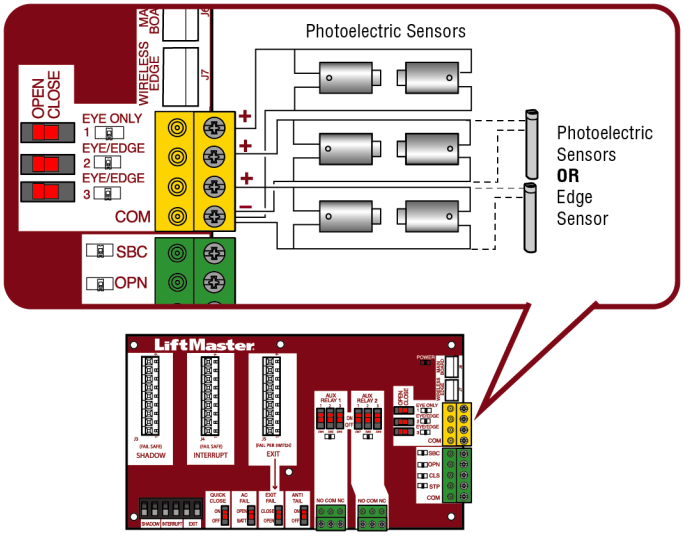

Step 5 Earth Ground Rod

Use the proper earth ground rod for your local area. The ground wire must be a single, whole piece of wire. Never splice two wires for the ground wire. If you should cut the ground wire too short, break it, or destroy its integrity, replace it with a single wire length.

1. Install the earth ground rod within 3 feet (.9 m) of the operator.
2. Run wire from the earth ground rod to the operator.

NOTE: *If the operator is not grounded properly the range of the remote controls will be reduced and the operator will be more susceptible to lightning and surge damage.*

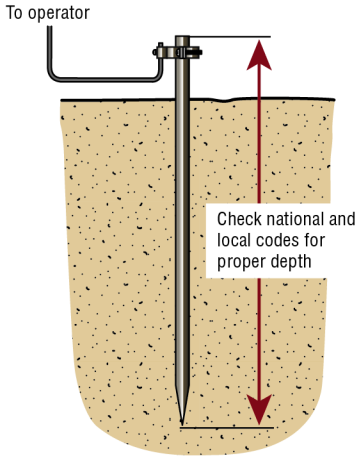

Step 6 Power Wiring

⚠ WARNING

To reduce the risk of SEVERE INJURY or DEATH:

- ANY maintenance to the operator or in the area near the operator MUST NOT be performed until disconnecting the electrical power (AC or solar and battery) and locking-out the power via the operator power switch. Upon completion of maintenance the area MUST be cleared and secured, at that time the unit may be returned to service.
- Disconnect power at the fuse box BEFORE proceeding. Operator MUST be properly grounded and connected in accordance with national and local electrical codes. ***NOTE:*** *The operator should be on a separate fused line of adequate capacity.*
- ALL electrical connections MUST be made by a qualified individual.
- DO NOT install ANY wiring or attempt to run the operator without consulting the wiring diagram.
- ALL power wiring should be on a dedicated circuit and well protected. The location of the power disconnect should be visible and clearly labeled.
- ALL power and control wiring MUST be run in separate conduit.

For dual gate applications, power will have to be connected to each operator. Main power supply and control wiring MUST be run in separate conduits. An optional Transformer Kit (Model 3PHCONV) can be used to change the input voltage (208/240/480/575 Vac) to an output voltage of 120 Vac (refer to Accessories).

NOTE: *If using an external receiver use shielded wire for the connections and mount the receiver away from the operator to avoid interference from the operator.*

MAXIMUM WIRE LENGTH (FEET)								
AMERICAN WIRE GAUGE (AWG)	1/2 HP STANDARD OPERATOR		1.0 HP STANDARD OPERATOR		TRANSFORMER KIT POWERING OPERATOR AND PARTIAL LOAD OF 120 VAC ACCESSORIES			
	120 VAC, 12A (includes fully loaded outlets)	120 VAC, 6A (operator only)	120 VAC, 18A (includes fully loaded outlets)	120 VAC, 12A (operator only)	208 VAC, 4.8A	240 VAC, 4.2A	480 VAC, 2.1A	575 VAC, 1.7A
14	85 (25.9 m)	165 (50.3 m)	55 (16.8 m)	85 (25.9 m)	360 (109.7 m)	480 (146.3 m)	1,900 (579.1 m)	2,800 (853.4 m)
12	130 (39.6 m)	260 (79.2 m)	90 (27.4 m)	130 (39.6 m)	570 (173.7 m)	750 (228.6 m)	3,000 (914.4 m)	4,500 (1,371.6 m)
10	210 (64 m)	420 (128 m)	140 (42.7 m)	210 (64 m)	900 (274.3 m)	1,200 (365.8 m)	4,800 (1,463 m)	7,100 (2,164.1 m)
8	330 (100.6 m)	670 (204.2 m)	220 (67.1 m)	330 (100.6 m)	1,400 (462.7 m)	1,900 (579.1 m)	7,600 (2,316.5 m)	11,300 (3,444.2 m)
6	530 (161.5 m)	1,060 (323.1 m)	350 (106.7 m)	530 (161.5 m)	2,300 (701 m)	3,000 (914.4 m)	12,100 (3,688.1 m)	18,000 (5,486.4 m)
4	850 (259.1 m)	1,700 (518.2 m)	560 (170.7 m)	850 (259.1 m)	3,700 (1,127.8 m)	4,800 (1,463 m)	19,300 (5,882.6 m)	28,500 (8,686.8 m)
Chart assumes: copper wire, 65°C, 5% drop								

INSTALLATION

All control wiring used to connect external devices to Class 2 circuits of the operator must be (QPTZ) Power-Limited Circuit Cables, Type CL2, CL2P, CL2R, or CL2X or other cable with equivalent or better electrical, mechanical, and flammability ratings.

Power wiring

1. Make sure the AC power switch on the operator is OFF (the AC power switch will turn the incoming 120 Vac power ON or OFF).
2. Turn off the AC power from the main power source circuit breaker.
3. Run the AC power wires to the junction box on the operator.
4. Remove the junction box cover.
5. Connect the green wire to the earth ground rod and AC ground using a wire nut. ***NOTE:*** *The earth ground rod can be grounded to the chassis.*
6. Connect the white wire to NEUTRAL using a wire nut.
7. Connect the black wire to HOT using a wire nut.
8. Replace the junction box cover. Ensure the wires are not pinched.
9. Turn on the AC power from the main power source circuit breaker.
10. Turn on the AC power switch.

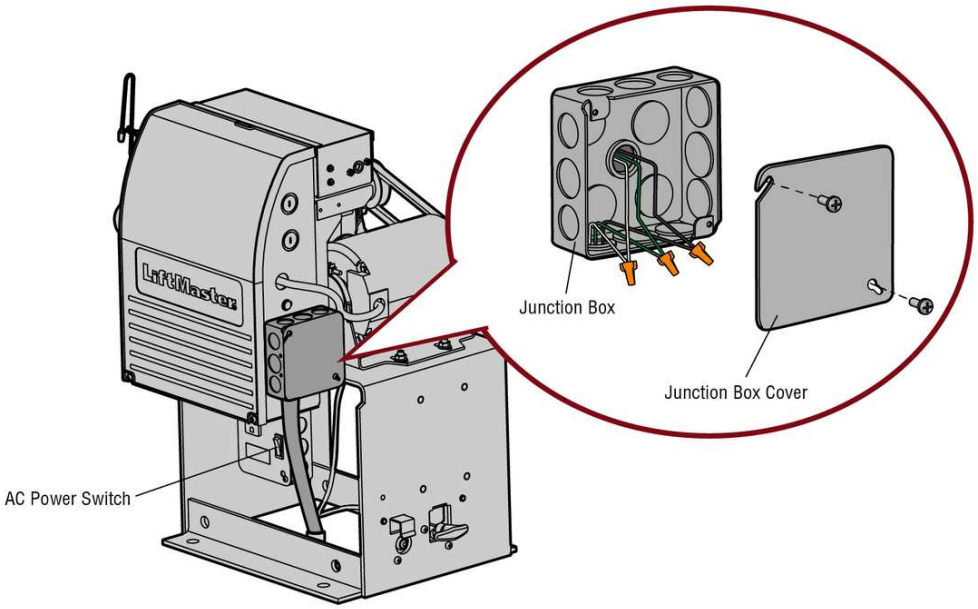

Step 7 Dual gate setup

There are two options for dual gate communication: wired or wireless. Follow the directions according to your application. Do not use wired and wireless communication simultaneously.

Wireless setup

To activate the wireless feature:

1. Choose an operator to be the network primary operator. All wireless accessories will need to be programmed to the primary operator. ***NOTE:*** *We recommend that all accessories and board configurations are set on the primary operator.*
2. Press and release the LEARN button on the primary operator. The green XMITTER LED will light. ***NOTE:*** *The operator will time out of programming mode after 180 seconds.*
3. Press and release the LEARN button again on the primary operator. The yellow NETWORK LED will light.
4. Press and release the OPEN test button to assign this operator as network primary.
5. Press and release the LEARN button on the second operator. The green XMITTER LED will light.
6. Press and release the LEARN button again on the second operator. The yellow NETWORK LED will light.
7. Press and release the CLOSE test button to assign this operator as network second.

Both operators will beep and the yellow NETWORK LEDs will turn off indicating programming is successful.

To deactivate the wireless feature:

1. Press and release the LEARN button on either operator. The green XMITTER LED will light.
2. Press and release the LEARN button again on the same operator. The yellow NETWORK LED will light.
3. Press and hold the LEARN button for 5 seconds. The yellow NETWORK LED will blink (operator will beep) then turn off indicating successful deactivation.
4. Repeat the steps for the other operator.

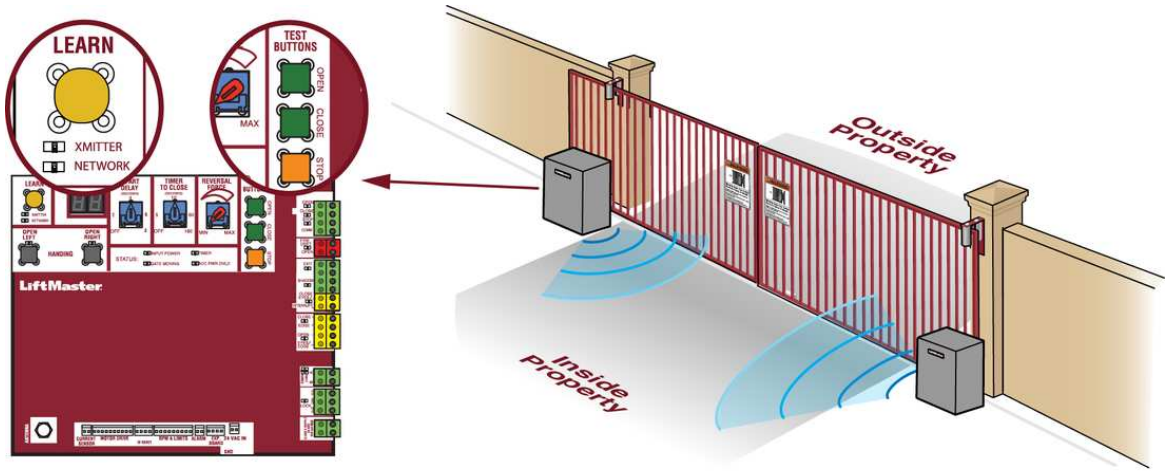

Wired setup

DUAL GATE WIRE TYPE (SHIELDED TWISTED PAIR CABLE)	
22AWG up to 200 feet (61 m)	18AWG - 200-1000 feet (61-305 m)
Wire must be rated at 30 Volt minimum	

Before digging, contact local underground utility locating companies. Use PVC conduit to prevent damage to cables.

1. **Disconnect ALL power to the operator.**
2. Trench across driveway to bury the shielded twisted pair cable.
3. Connect the wires from the shielded twisted pair cable to the Com Link terminals on the primary gate operator control board. ***NOTE:*** *We recommend that all accessories and board configurations are set on the primary operator.*
4. Route the shielded twisted pair cable to the secondary gate operator's control board.
5. Connect the wires from the shielded twisted pair cable to the Com Link terminals on the secondary control board (Com Link A to Com Link A and Com Link B to Com Link B). Ground the shield of the cable to the chassis ground of one operator.
6. **Connect ALL power to the operator.**

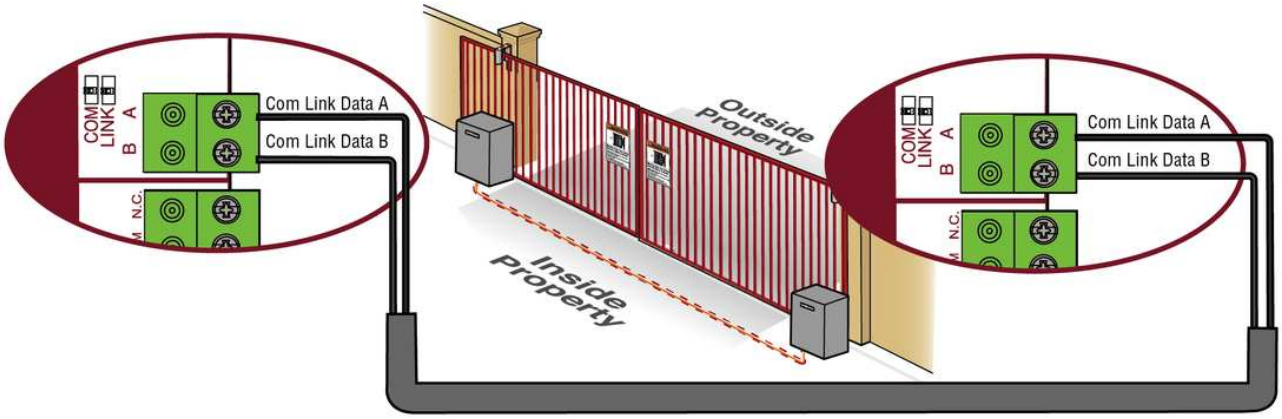

Step 8 install the Cover

Before installing the cover, follow the instructions in the Adjustment section to set the handing and limits.

1. Slide the cover over the operator.
2. Align the hole in the cover with the threaded hole in the operator's chassis and secure the cover with the provided screw.

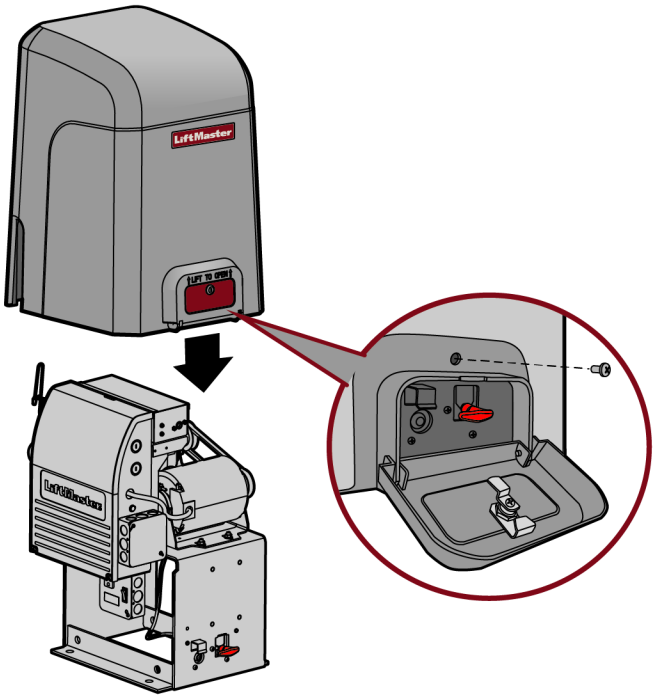

Adjust the Handing and Limits

⚠ WARNING

To reduce the risk of SEVERE INJURY or DEATH:

- Without a properly installed safety reversal system, persons (particularly small children) could be SERIOUSLY INJURED or KILLED by a moving gate.
- Too much force on gate will interfere with proper operation of safety reversal system.
- NEVER increase force beyond minimum amount required to move gate.
- NEVER use force adjustments to compensate for a binding or sticking gate.
- If one control (force or travel limits) is adjusted, the other control may also need adjustment.
- After ANY adjustments are made, the safety reversal system MUST be tested. Gate MUST reverse on contact with an object.

The adjustments allow you to set where the gate will stop in the open and close position. The force is adjusted automatically when you set the limits but should be fine tuned using the FORCE dial on the control board (refer to Force Dial section). The Test Buttons on the control board will not work until the handing is set. For dual gate applications the limits will have to be set for each operator. The gate MUST be attached to the operator before setting the limits and force.

OPEN RIGHT: If the operator is installed on the right side of the driveway when looking out of the property, the gate should be set to open right.

OPEN LEFT: If the operator is mounted on the left side of the driveway when looking out of the property, the gate should be set to open left.

Set the handing

1. To set the initial handing of the operator, make sure that both OPEN LEFT and OPEN RIGHT LEDs are flashing. If they are not flashing, press and hold both the OPEN LEFT and OPEN RIGHT handing buttons until both handing LEDs start to flash and the operator beeps.
2. Press and release either the OPEN RIGHT or OPEN LEFT button depending on which direction the gate should open. The corresponding handing LED will turn solid.

To relearn the handing, repeat the steps above.

Set the limits

1. Make sure the gate is closed.
2. Press and release the OPEN test button to open the gate.
3. Press the STOP test button when the desired OPEN limit is reached. Adjust the limit nut or cam so it makes contact with the OPEN limit switch at this position. If the gate stops early, move the limit nut or cam to allow for additional travel.
4. Press and release the CLOSE test button to close the gate.
5. Press the STOP test button when the desired CLOSE limit is reached. Adjust the limit nut or cam so it makes contact with the CLOSE limit switch at this position. If the gate stops early, move the limit nut to allow for additional travel.

Set the Force and Run Distance

1. Press the OPEN test button to open the gate.
2. Press and release both the OPEN LEFT and OPEN RIGHT handing buttons.
3. Press the handing button below the solid LED.
4. Run the operator one full cycle using the test buttons. The initial forces and run distance will be set during this cycle.

HANDING LEDS			
OPEN LEFT LED	**OPEN RIGHT LED**	**OPERATOR MODE**	**EXPLANATION**
OFF	OFF	NORMAL MODE	Control board not powered
BLINKING	BLINKING	HANDING SETUP MODE	Handing not set
BLINKING	ON	HANDING SETUP MODE	Handing set to the direction of the solid LED
ON	BLINKING	HANDING SETUP MODE	Handing set to the direction of the solid LED
ON	OFF	NORMAL MODE	Open left handing is set
OFF	ON	NORMAL MODE	Open right handing is set

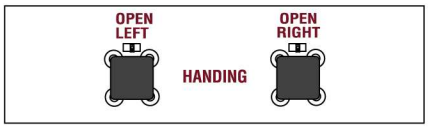

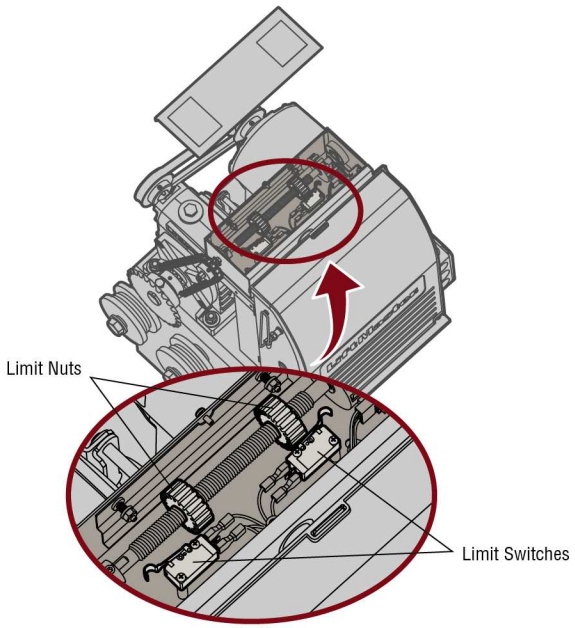

ADJUSTMENT

Readjust the Limits

To readjust the limits, follow the "Set the Limits" and "Set the Force and Run Distance" instructions above. ***It is important that the force and run distance are set after every limit readjustment.***

Fine Tune the Force

Once the initial limits have been set, the REVERSAL FORCE DIAL on the control board is used for fine tuning the force where wind or environmental changes may affect the gate travel. The REVERSAL FORCE DIAL is set to minimum at the factory.

Based on the length and weight of the gate it may be necessary to make additional force adjustments. The force setting should be high enough that the gate will not reverse by itself nor cause nuisance interruptions, but low enough to prevent serious injury to a person. The force setting is the same for both the open and close gate directions.

Settings 1-3: Fixed force settings (the force will not adjust due to gate wear or temperature changes)

Settings 4-10: Automatically increase the force due to gate wear or temperature changes

1. Open and close the gate with the TEST BUTTONS.
2. If the gate stops or reverses before reaching the fully open or closed position, increase the force by turning the force control slightly clockwise.
3. **Perform the "Obstruction Test" after every limit and force setting adjustment (see below).**

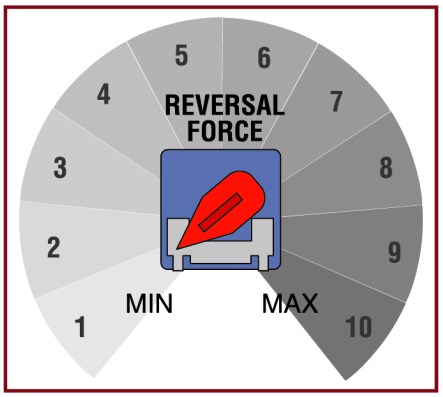

Obstruction Test

The operator is equipped with an inherent (built in to the operator) obstruction sensing device. If the gate encounters an obstruction during motion, the operator will reverse direction of the gate and then stop. The following procedure will test ONLY the inherent (built in to the operator) obstruction sensing device:

1. Open and close the gate with the TEST BUTTONS, ensuring that the gate is stopping at the proper open and close limit positions.
2. Place an object between the open gate and a rigid structure. Make sure that any external entrapment protection devices will NOT be activated by the object.
3. Run the gate in the close direction. The gate should stop and reverse upon contact with the object. If the gate does not reverse off the object, reduce the force setting by turning the force control slightly counter-clockwise. The gate should have enough force to reach both the open and close limits, but MUST reverse after contact with an object.
4. Repeat the test for the open direction.

Test the operator after any adjustments are made.

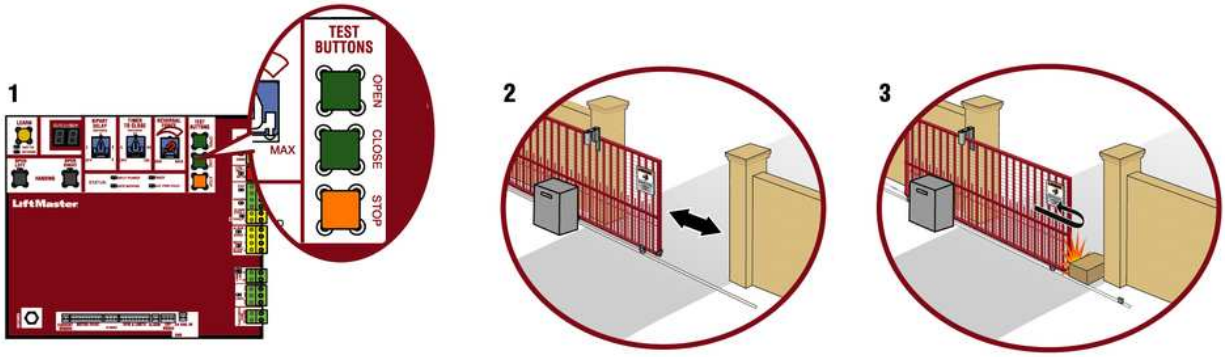

OPERATOR OVERVIEW

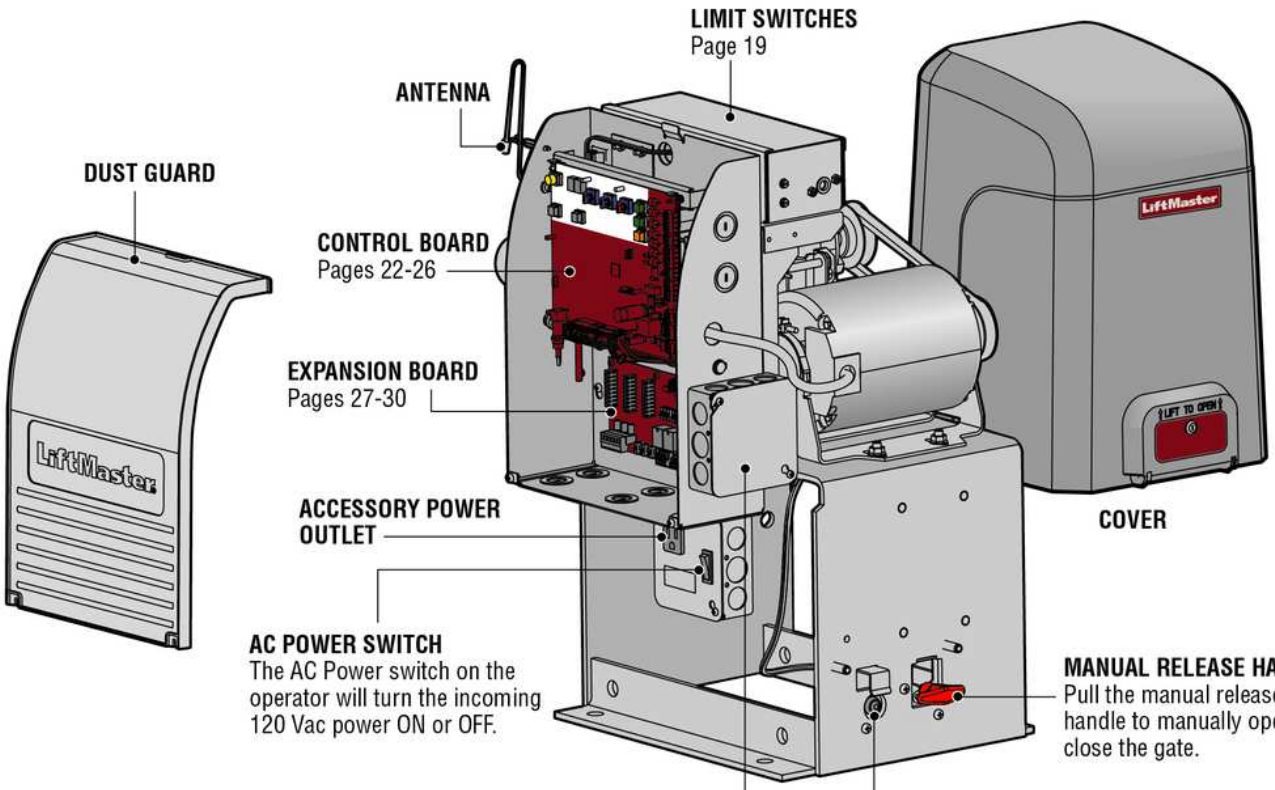

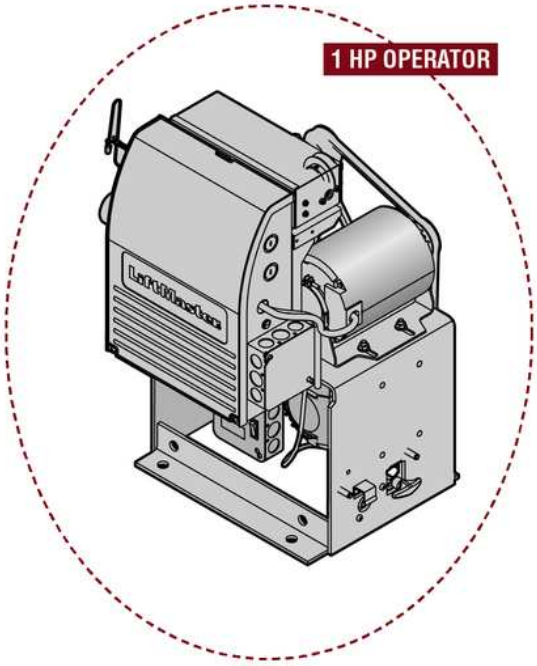

CONTROL BOARD OVERVIEW

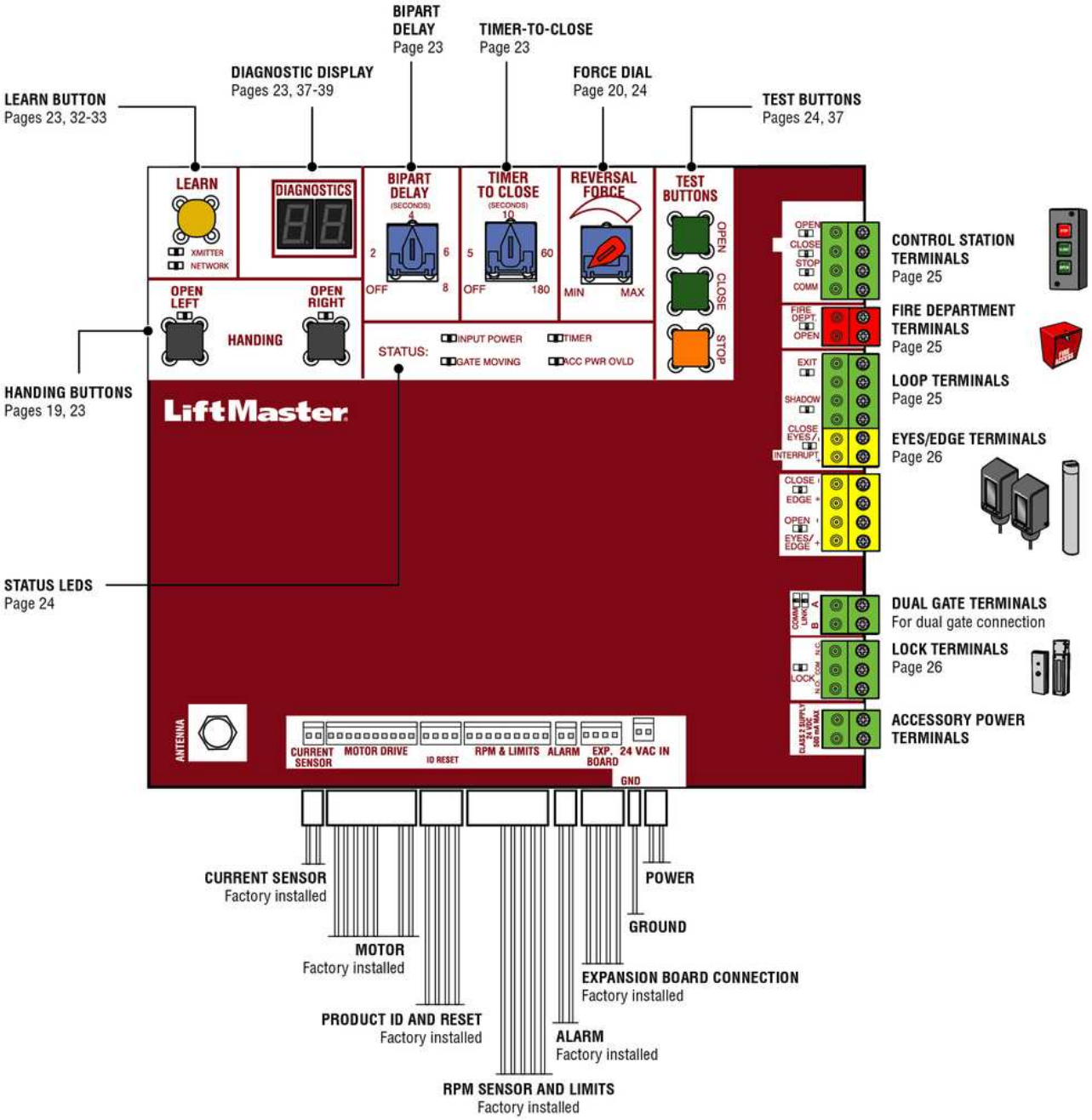

CONTROL BOARD OVERVIEW

Learn Button

The LEARN button is used for programming (refer to Programming).

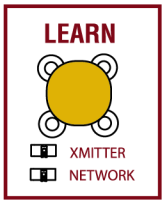

Diagnostic Display

The diagnostic display will show the operator type, firmware version, and codes. The operator type will display as “SL” followed by a “30” which indicates the operator type as SL3000UL. The firmware version will show after the operator type, example “1.2”. For more information about the codes refer to the Troubleshooting section.

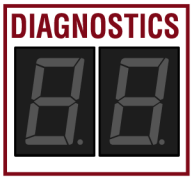

Handing Buttons

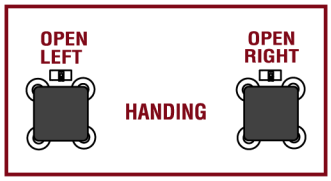

The handing buttons are used to determine which direction the gate will open and they are also used to set the limits (refer to the Adjustment section).

OPEN RIGHT: If the operator is installed on the right side of the drive when looking out of the property, a swing gate will swing to the right (turn counter clockwise) when opening and a slide gate will slide to the right when opening.

OPEN LEFT If the operator is mounted on the left side of the drive when looking out of the property, a swing gate will swing to the left (turn clockwise) when opening and a slide gate will slide to the left when opening.

NOTE: *For gates installed on the outside of the property, the setting will be opposite. Determine the direction by looking towards the property from the outside.*

Bipart Delay

Used in dual gate applications where a maglock, solenoid lock, or decorative overlay would require one gate to close before the other. The BIPART DELAY is also used in applications where one gate travels a longer distance than the other.

ON/OFF: The operator with the BIPART DELAY dial ON will delay from the close limit when opening and be the first to close from the open limit.

BOTH OFF: No affect.

BOTH ON: No affect.

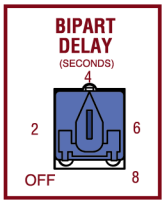

Timer-to-Close (TTC)

The TTC is factory set to OFF (0). Rotate the TIMER-TO-CLOSE dial to the desired setting (0 to 180 seconds). Any radio command, single button control, or CLOSE command on the control board prior to the TTC expiring will close the gate. The TTC is reset by any signals from the open controls, loops, close edges, and close photoelectric sensors.

0 seconds (OFF): The gate will remain open until the operator receives another command from a control.

1-180 seconds (ON): The gate will automatically close after the specified time period.

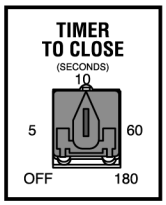

CONTROL BOARD OVERVIEW

Reversal Force Dial

The REVERSAL FORCE dial adjusts the force. See the *Adjustment* section.

Settings 1-3: Fixed force settings (the force will not adjust due to gate wear or temperature changes)

Settings 4-10: Automatically increase the force due to gate wear or temperature changes

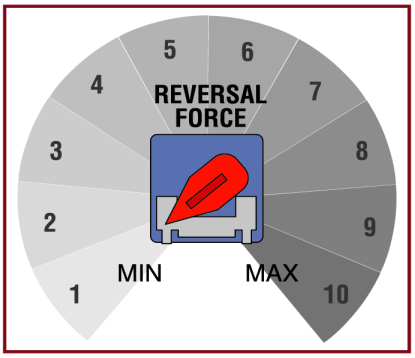

Test Buttons

Used to operate the gate (OPEN, STOP and CLOSE). Also used to view the code history (refer to the Troubleshooting section).

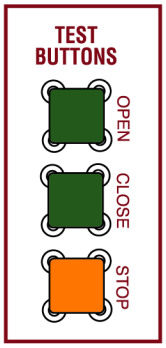

Status LEDs

LED	STATE	DEFINITION
INPUT POWER	OFF	OFF state
	ON	AC power available
TIMER	OFF	The timer is disabled
	ON	The timer is enabled
	1 blink/second	The timer is running
	2 blinks/second	The timer is paused
	8 blinks/second	The timer is cancelled
GATE MOVING	OFF	The gate is stopped
	ON	The gate is opening or closing
	1 blink/second	E1 (single entrapment)
	8 blinks/second	E2 (double entrapment)
ACC PWR OVLD	OFF	Accessory power is okay
	ON	Accessory overload protector opened

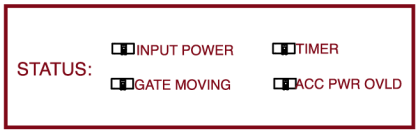

WIRE ACCESSORIES TO CONTROL BOARD

All control wiring used to connect external devices to Class 2 circuits of the operator must be (QPTZ) Power-Limited Circuit Cables, Type CL2, CL2P, CL2R, or CL2X or other cable with equivalent or better electrical, mechanical, and flammability ratings.

Three Button Control Station

TERMINALS	FUNCTION	WIRING EXAMPLE
OPEN and COMM	Opens a closed gate. Hard open (maintained switch overrides external safeties and resets alarm condition). If maintained, pauses Timer-to-Close at OPEN limit. Opens a closing gate and holds open an open gate (within line-of-sight).	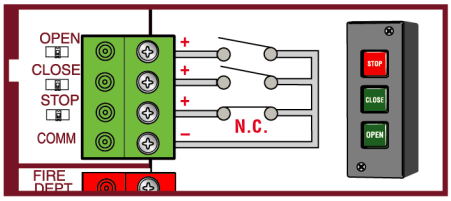
CLOSE and COMM	Closes an open gate. Hard close (maintained switch overrides external safeties and resets alarm condition within line-of-sight)	
STOP and COMM	Stops a moving gate. Hard stop (maintained switch overrides Open and Close commands and resets alarm condition). If maintained, cancels Timer-to-Close at OPEN limit. Overrides Open and Close commands (within line-of-sight).	

Fire Department

TERMINALS	FUNCTION	WIRING EXAMPLE
FIRE DEPT (-) and OPEN (+)	FIRE DEPT and OPEN terminals act as a hard open. Maintained input overrides (ignores) external safeties (photoelectric sensor and edge), pauses Timer-to-Close. Momentary input logic as single button control and safeties remain active, re-enables Timer-to-Close.	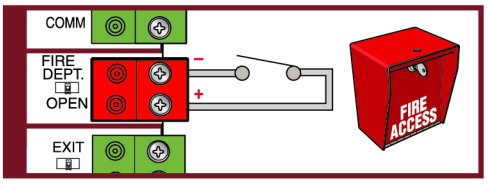

Loops

The Loop terminals are used for connecting loops and various control devices such as telephone entry keypads, vehicle probes, etc. Connect the accessory to the terminals based on how the accessory should function.

TERMINALS	FUNCTION	WIRING EXAMPLE
EXIT and COM	This input is a soft open command (maintained switch does not override external safeties and does not reset alarm condition). Used for exit probe, telephone entry, external exit loop detector, or any device that would command the gate to open. • Opens a closing gate and holds open an open gate, if maintained, pauses Timer-to-Close at OPEN limit.	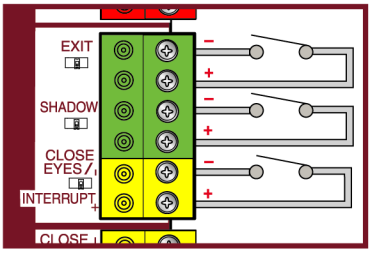
SHADOW and COM	This input is used for external shadow loop detector when loop is positioned under the swing of the gate. • Holds open gate at open limit • Only active when the gate is at the OPEN limit, disregarded at all other times • Pauses Timer-to-Close at OPEN limit	
INTERRUPT and COM	This input is used for photoelectric sensors and external interrupt loop detector when loop is on the outside of the gate. • Holds open gate at open limit • Stops and reverses a closing gate to open limit • Pauses Timer-to-Close at OPEN limit, activates quick close and anti-tailgate features when enabled on the expansion board	

WIRE ACCESSORIES TO CONTROL BOARD

Photoelectric Sensors and Edge Sensors

The EYES/EDGE terminals are used for connecting entrapment protection devices. **At least two external monitored entrapment protection devices are required prior to gate movement;** one in the open and one in the closed direction. Monitored entrapment protection devices should have been installed with the operator at the time of installation. Only ONE monitored device may be connected to each input. A monitored device sends a pulsed signal to the operator so the operator is aware of the device. If the operator does not receive the signal from the device indicating it is working properly, it will not run in that direction.

TERMINALS	FUNCTION	WIRING EXAMPLE
CLOSE EYES/INTERRUPT	The CLOSE EYES/INTERRUPT input is for close direction photoelectric sensors. When an obstruction is sensed during gate closing the gate will open to the full open position. This input will be disregarded during gate opening and resets the Timer-to-Close.	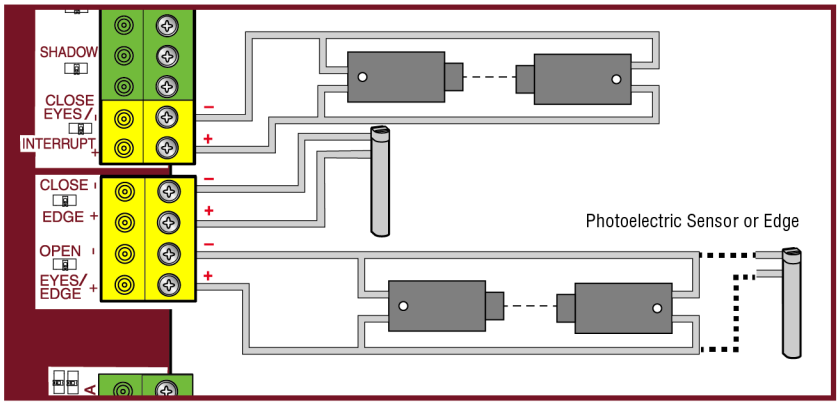
CLOSE EDGE	The CLOSE EDGE input is for the close direction edge sensors. When an obstruction is sensed during gate closing the gate will reverse to the full open position, disengaging the Timer-to-Close. This input will be disregarded during gate opening.	
OPEN EYES/EDGE	The OPEN EYES/EDGE input is for open direction photoelectric sensors or edge sensors. When an obstruction is sensed during gate opening the gate will reverse for 4 seconds then stop. This input will be disregarded during gate closing.	

Locks

TERMINALS	FUNCTION	WIRING EXAMPLE
NC and COM	Normally Closed (N.C.) output for maglocks. Relay activates prior to motor activation and during motor run. Relay is off when motor is off.	**Maglock Wiring** 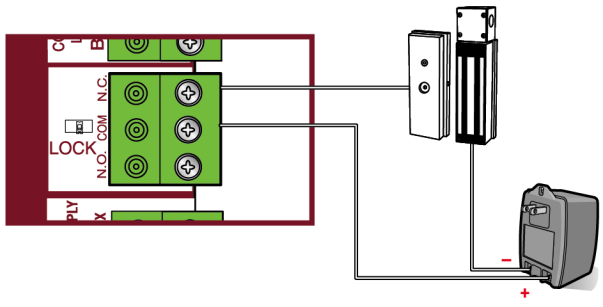

EXPANSION BOARD OVERVIEW

⚠CAUTION

- To AVOID damaging the circuit board, relays or accessories, DO NOT connect more than 42 Vdc (32 Vac) to the AUX relay contact terminal blocks.

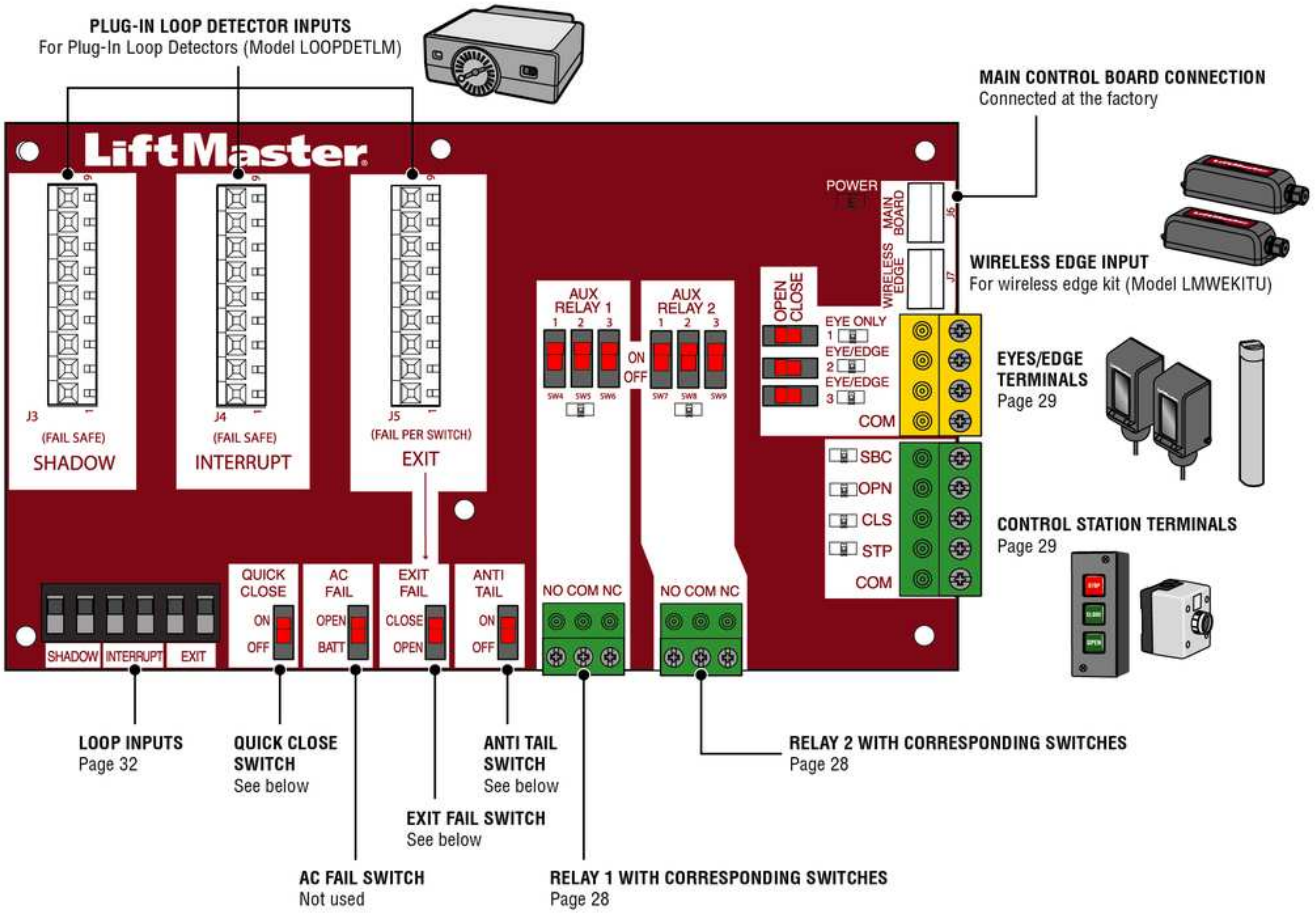

EXIT FAIL Switch

OPEN: If the EXIT plug-in loop detector (model LOOPDETLM) detects a fault, then the gate will open and remain open until fault is cleared.
CLOSE: If the EXIT plug-in loop detector (model LOOPDETLM) detects a fault, faults are ignored (EXIT loop is faulted and inoperative).

AC FAIL Switch

NOT USED

ANTI TAIL Switch

OFF: When CLOSE EYES/Interrupt loop is activated it causes a closing gate to stop and reverse.
ON: When CLOSE EYES/Interrupt loop is activated it causes a closing gate to pause. Once the vehicle is clear the gate will continue to close.

QUICK CLOSE Switch

OFF: No change to the gate's normal operation.
ON: When CLOSE EYES/Interrupt loop is deactivated it causes an opening or a stopped gate to close (ignores the Timer-to-Close).

EXPANSION BOARD OVERVIEW

Auxiliary Relay 1 and 2

Normally Open (N.O.) and Normally Closed (N.C.) relay contacts to control external devices, for connection of Class 2, low voltage (42 Vdc [34 Vac] max 5 Amps) power sources only. Function of relay contact activation determined by switch settings.

AUX RELAY SETTING	SWITCH SETTINGS 1	2	3	AUX RELAY 1	AUX RELAY 2
Off (no feature selected)	OFF	OFF	OFF	Relay always off.	
Open Limit Switch	OFF	OFF	ON	Energizes at open limit. Use with SAMS (Sequenced Access Management System, jointly with barrier gate).	
Close Limit Switch	OFF	ON	OFF	Energizes when not at close limit. For an additional audible or visual display, connect an external light (low voltage).	
Gate Motion	OFF	ON	ON	Energizes when motor is on (gate in motion). For an additional audible or visual display, connect an external buzzer or light (low voltage).	
Pre-Motion Delay	ON	OFF	OFF	Energizes 3 seconds before gate motion and remains energized during gate motion. The onboard alarm will sound. For an additional audible or visual display, connect an external buzzer or light (low voltage).	Energizes 3 seconds before gate motion and remains energized during gate motion. For an additional audible or visual display, connect an external buzzer or light (low voltage).
Power	ON	ON	OFF	Not used.	
Tamper	ON	OFF	ON	Energizes if gate is manually tampered with by being pushed off of close limit. For an additional audible or visual display, connect an external buzzer or light (low voltage).	
Cycle Quantity Feedback*	ON	ON	ON	The 1, 2, and 3 LEDs will blink out the cycle count (cycle count is stored on the control board). See below.	Red/green light functionality, see below.

* Cycle count

First, note the current Aux Relay switch positions. To determine the actual cycles that the gate operator has run (in thousands), set all three Aux Relay switches to the ON setting for Aux Relay 1. The Expansion Board's 1, 2, and 3 LEDs will blink out the cycle count, with 1 LED blinking 1000's, 2 LED blinking 10,000's, 3 LED blinking 100,000's, and simultaneously all three LED's blink 1,000,000's (e.g. 1 LED blinks 3 times, 2 LED blinks 6 times, and 3 LED blinks once. Cycle count is 163,000.). Cycle count displayed is between 1,000 and 9,999,000 cycles. After servicing, set Aux Relay switches back to their appropriate positions. Cycle count cannot be reset or changed. If under 1,000 cycles the 1, 2, and 3 LEDs will turn on for 10 seconds, then turn off.

NOTE: *The expansion board will flash the cycle count 3 times then all the LEDs will turn on solid for 10 seconds then turn off.*

Auxiliary relay wiring example

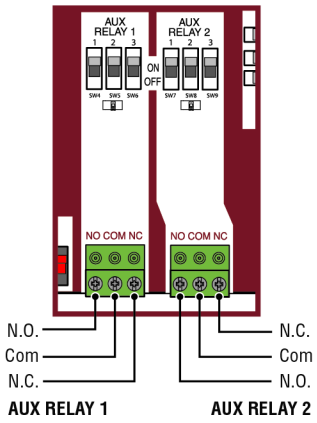

RED/GREEN LIGHT FUNCTIONALITY						
Red light wired to AUX RELAY 1. Green light wired to AUX RELAY 2.						
GATE STATE	**AUX RELAY 1 SWITCHES**			**AUX RELAY 2 SWITCHES**		
	1 OFF	**2 OFF**	**3 OFF**	**1 ON**	**2 ON**	**3 ON**
Closed	Red light OFF*			Green light OFF		
Opening	Red light ON/Flash			Green light OFF		
Open	Red light OFF			Green light ON		
Closing	Red light ON/Flash			Green light OFF		
Defined Mid Stop	n/a			n/a		
Undefined Mid Stop	Red light ON			Green light OFF		
Timer more than 5 seconds	Red light OFF			Green light ON		
Timer less than 5 seconds	Red light ON/Flash			Green light OFF		
* For red light ON when gate is closed, set switch 1 on AUX RELAY 1 to ON						

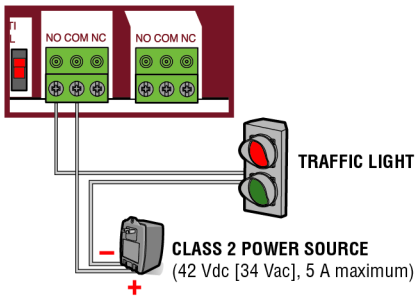

WIRE ACCESSORIES TO EXPANSION BOARD

Photoelectric Sensors and Edge Sensors

The EYES/EDGE terminals are used for connecting entrapment protection devices. **At least two external monitored entrapment protection devices are required prior to gate movement;** one in the open and one in the closed direction. Monitored entrapment protection devices should have been installed with the operator at the time of installation. Only ONE monitored device may be connected to each input. A monitored device sends a pulsed signal to the operator so the operator is aware of the device. If the operator does not receive the signal from the device indicating it is working properly, it will not run in that direction.

TERMINALS	FUNCTION	WIRING EXAMPLE
EYE ONLY and COM	Open or Close Direction Photoelectric Sensors, the functionality is based on the switch settings (located next to the terminals) **Switch set to CLOSE:** gate reverses fully when an obstruction is sensed **Switch set to OPEN:** gate reverses 4 seconds when an obstruction is sensed	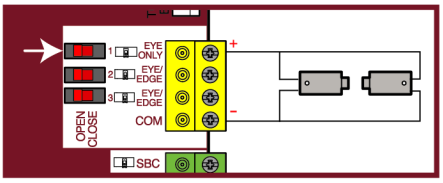
EYE/EDGE and COM	Open or Close Direction Photoelectric Sensors or Edge Sensor, the functionality is based on the switch settings (located next to the terminals) **Switch set to CLOSE:** gate reverses fully when an obstruction is sensed **Switch set to OPEN:** gate reverses 4 seconds when an obstruction is sensed	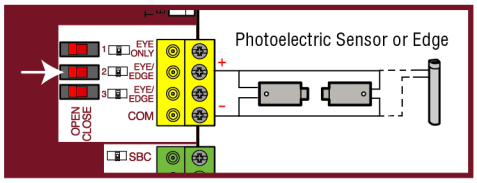
EYE/EDGE and COM	Open or Close Direction Photoelectric Sensors or Edge Sensor, the functionality is based on the switch settings (located next to the terminals) **Switch set to CLOSE:** gate reverses fully when an obstruction is sensed **Switch set to OPEN:** gate reverses 4 seconds when an obstruction is sensed	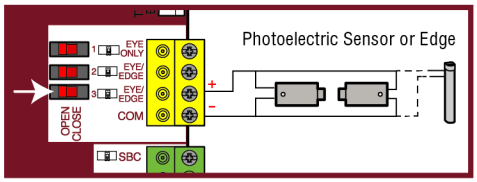

Control Station

TERMINALS	FUNCTION	WIRING EXAMPLE
SBC and COM	• Gate command sequence - Open, Stop, Close, Stop, ... • Soft Open, Soft Close, Soft Stop (maintained switch does not override external safeties and does not reset alarm condition)	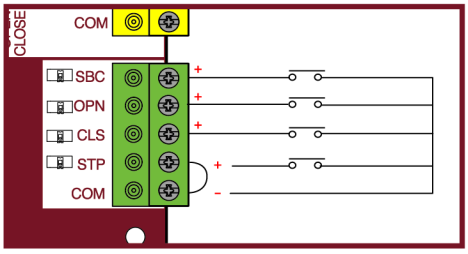
OPEN and COM	• Open command - opens a closed gate • Soft open (maintained switch does not override external safeties and does not reset alarm condition) • If maintained, pauses Timer-to-Close at OPEN limit • Opens a closing gate and holds open an open gate	
CLOSE and COM	• Close command - closes an open gate • Soft close (maintained switch does not override external safeties and does not reset alarm condition)	
STOP and COM	• Stop command - stops a moving gate • If maintained, pauses Timer-to-Close at OPEN limit • Overrides an Open or Close command	

WIRE ACCESSORIES TO EXPANSION BOARD

Loops

TERMINALS	FUNCTION	WIRING EXAMPLE
EXIT	Loop wire connection for plug-in loop detector when loop is inside secured area near gate. • Open command - opens a closed gate • Soft open (maintained switch does not override external safeties and does not reset alarm condition) • If maintained, pauses Timer-to-Close at OPEN limit • Opens a closing gate and holds open an open gate	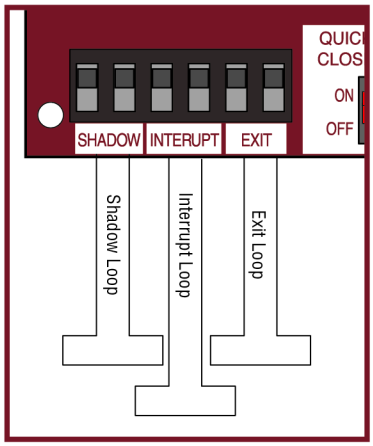
SHADOW	Loop wire connection for plug-in loop detector when loop is positioned under the gate. • Holds open gate at open limit • Disregarded during gate motion • Pauses Timer-to-Close at Open Limit	
INTERRUPT	Loop wire connection for plug-in loop detector when loop is on the outside of the gate. • Holds open gate at open limit • Stops and reverses a closing gate • Pauses Timer-to-Close at Open Limit	

ADDITIONAL WIRING

SAMS Wiring With Relays Not Energized

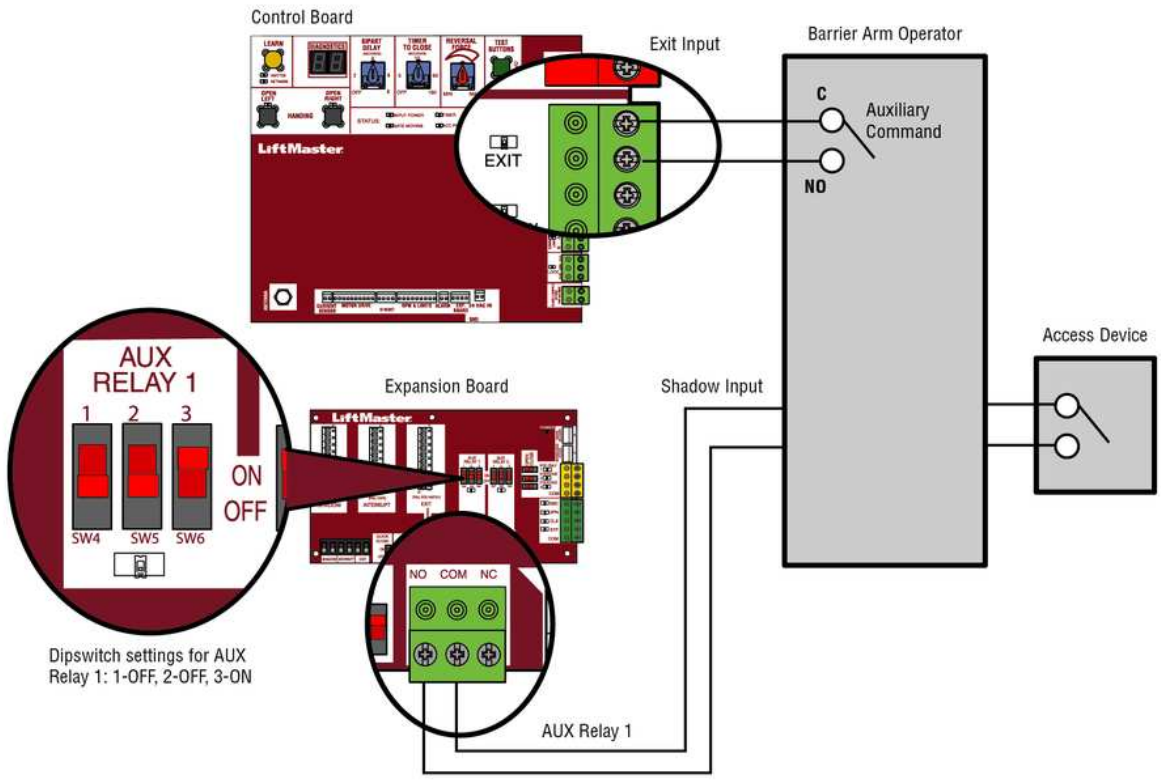

ADDITIONAL WIRING

⚠ WARNING

To protect against fire and electrocution:

- DISCONNECT power (AC or solar and battery) BEFORE installing or servicing operator.

For continued protection against fire:

- Replace ONLY with fuse of same type and rating.

Field Wiring

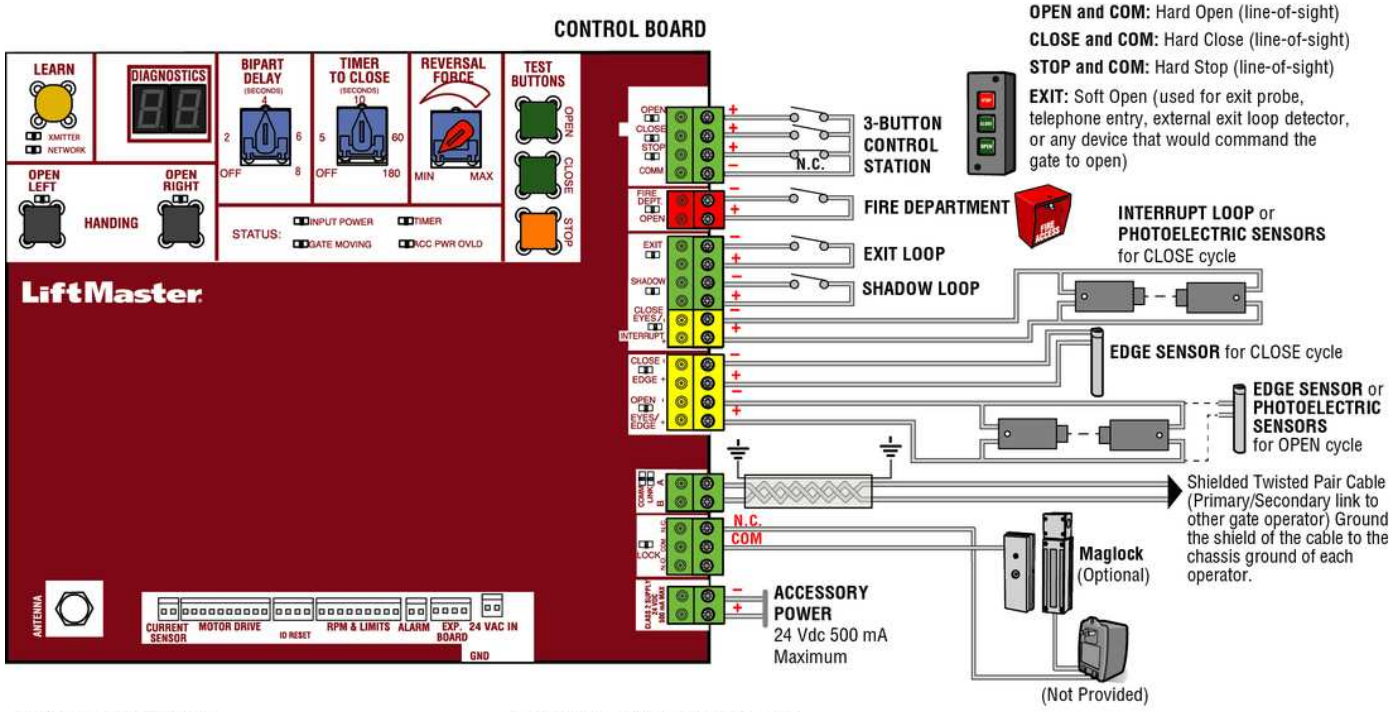

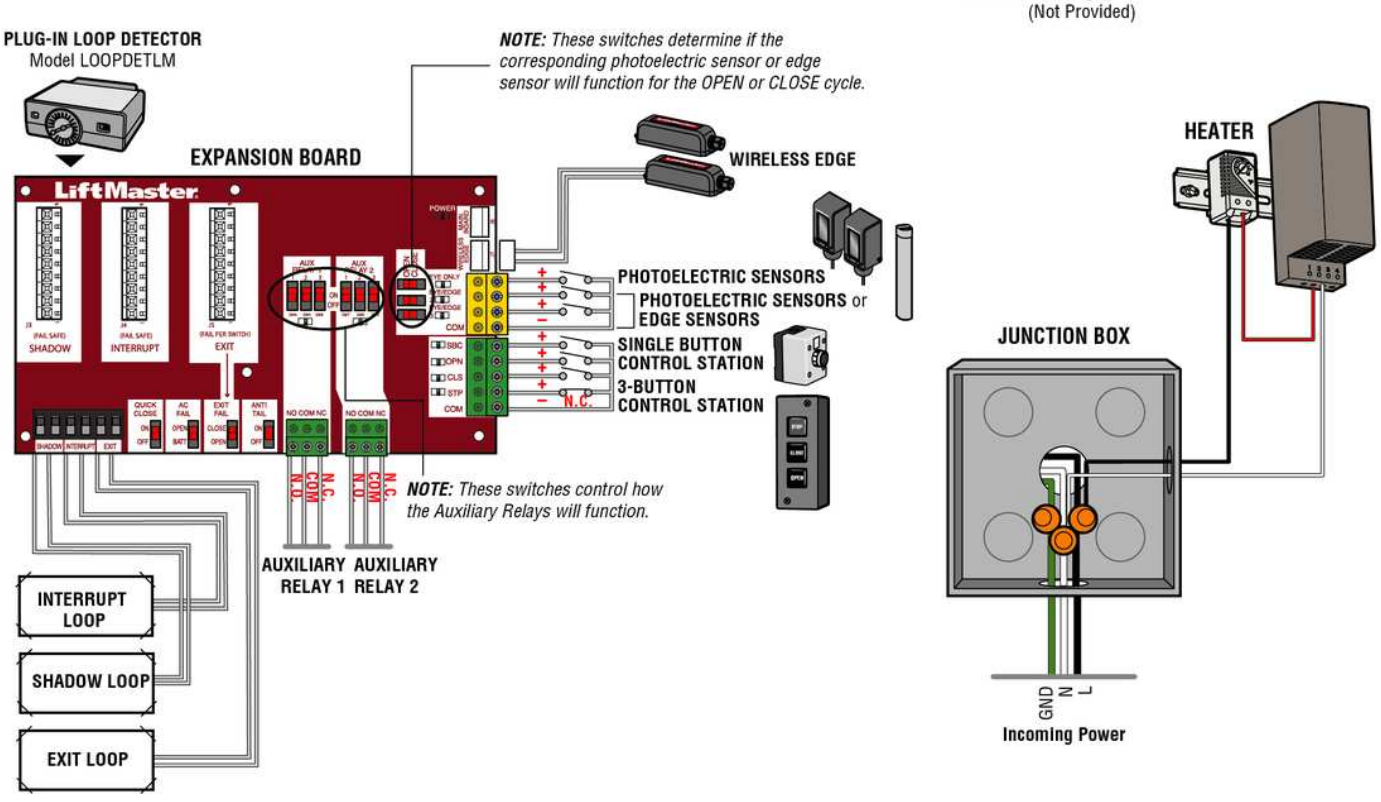

Remote Controls (Not Provided)

A total of 50 Security+ 2.0® remote controls or KPW250 keypads and 2 keyless entries (1 PIN for each keyless entry) can be programmed to the operator. When programming a third keyless entry to the operator, the first keyless entry will be erased to allow the third keyless entry to be programmed. When the operator's memory is full it will exit the programming mode and the remote control will not be programmed. The memory will need to be erased before programming any additional remote controls. ***NOTE:*** *If installing an 86LM to extend the range of the remote controls DO NOT straighten the antenna.*

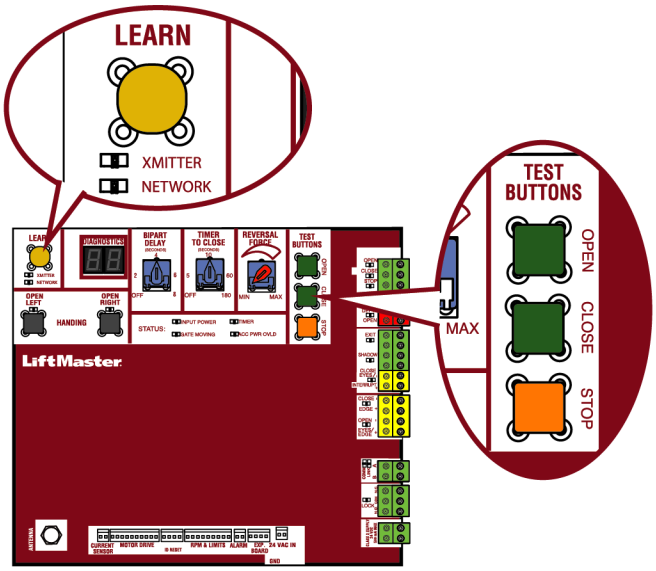

There are 3 different options for programming the remote control depending on how you would like the remote control to function. Choose a programming option:

OPTION	DESCRIPTION	PROGRAMMING STEPS
Single button as OPEN only	Program a single button on the remote control for open only. The Timer-to-Close can be set to close the gate.	1. Press and release the LEARN button (operator will beep and green XMITTER LED will light). ***NOTE:*** *The operator will time out of programming mode after 30 seconds.* 2. Press the OPEN button. 3. Press the remote control button that you would like to program.
Single button (SBC) as OPEN, CLOSE, and STOP	Program one remote control button as an open, close, and stop.	1. Press and release the LEARN button (operator will beep and green XMITTER LED will light). ***NOTE:*** *The operator will time out of programming mode after 30 seconds.* 2. Press the remote control button that you would like to program.
Three separate buttons as OPEN, CLOSE, and STOP	Program each remote control button as an open, close, and stop.	1. Press and release the LEARN button (operator will beep and green XMITTER LED will light). ***NOTE:*** *The operator will time out of programming mode after 30 seconds.* 2. Press the OPEN, CLOSE, or STOP button, depending on the desired function. 3. Press the remote control button that you would like to program.

The operator will automatically exit learn mode (operator will beep and green XMITTER LED will go out) if programming is successful. To program additional Security+ 2.0® remote controls or remote control buttons, repeat the programming steps above.

NOTICE: This device complies with Part 15 of the FCC rules and Industry Canada's license-exempt RSSs. Operation is subject to the following two conditions: (1) this device may not cause harmful interference, and (2) this device must accept any interference received, including interference that may cause undesired operation.
Any changes or modifications not expressly approved by the party responsible for compliance could void the user's authority to operate the equipment.
This device must be installed to ensure a minimum 20 cm (8 in.) distance is maintained between users/bystanders and device.
This device has been tested and found to comply with the limits for a Class B digital device, pursuant to part 15 of the FCC rules and Industry Canada ICES standard. These limits are designed to provide reasonable protection against harmful interference in a residential installation. This equipment generates, uses and can radiate radio frequency energy and, if not installed and used in accordance with the instructions, may cause harmful interference to radio communications. However, there is no guarantee that interference will not occur in a particular installation. If this equipment does cause harmful interference to radio or television reception, which can be determined by turning the equipment off and on, the user is encouraged to try to correct the interference by one or more of the following measures:
- Reorient or relocate the receiving antenna.
- Increase the separation between the equipment and receiver.
- Connect the equipment into an outlet on a circuit different from that to which the receiver is connected.
- Consult the dealer or an experienced radio/TV technician for help.

LiftMaster Internet Gateway (not provided)

To program the operator to the LiftMaster Internet Gateway:

Using the learn button on the opertaor's control board

1. Connect the ethernet cable to the LiftMaster Internet Gateway and the router.
2. Connect power to the LiftMaster Internet Gateway.
3. Create an online account by visiting www.myliftmaster.com.
4. Register the LiftMaster Internet Gateway.
5. Use an internet enabled computer or smartphone to add devices. The LiftMaster Internet Gateway will stay in learn mode for three minutes.
6. Press the Learn button twice on the primary operator (the operator will beep as it enters learn mode). The LiftMaster Internet Gateway will pair to the operator if it is within range and the operator will beep if programming is successful.

Using the reset button on the operator

1. Connect the ethernet cable to the LiftMaster Internet Gateway and the router.
2. Connect power to the LiftMaster Internet Gateway.
3. Create an online account by visiting www.myliftmaster.com.
4. Register the LiftMaster Internet Gateway.
5. Use an internet enabled computer or smartphone to add devices. The LiftMaster Internet Gateway will stay in learn mode for three minutes.
6. Ensure gate is closed.
7. Give the operator an OPEN command.
8. Within 30 seconds, when the gate is at the open limit press and release the reset button 3 times (on primary gate) to put primary operator into High Band Learn Mode (the operator will beep as it enters learn mode). The LiftMaster Internet Gateway will pair to the operator if it is within range and the operator will beep if programming is successful.

The status as shown by the LiftMaster Internet Gateway app will be either “open” or “closed”. The gate operator can then be controlled through the LiftMaster Internet Gateway app.

Constant Pressure Override (CPO)

Constant Pressure Override is for use with KPW5 and KPW250 keypads (not provided). The KPW5/KPW250 wireless commercial keypads are security keypads and can only be programmed to ONE gate operator (see the KPW5/KPW250 manual for complete programming instructions).

The Constant Pressure Override feature is intended to temporarily override a fault in the entrapment protection system, in order to operate the gate until the external entrapment protection device is realigned or repaired. Use the feature only in line of sight of the gate when no obstructions to travel are present. External entrapment protection devices include LiftMaster monitored photoelectric sensors and LiftMaster monitored wired and wireless edge sensors. Be sure to repair or replace these devices promptly if they are not working properly.

To use Constant Pressure Override:

1. Enter a valid 4-digit PIN.
2. Press and hold # for 5 seconds to enter CPO. Continue to hold # to keep the operator in motion. A continuous tone will sound until limit is met and/or # is released.
3. The operator will stop when either the operator reaches a limit or the user releases #.

Gate Hold Open Feature

The gate hold open feature will disable the timer and keep the gate at the open limit. The gate hold open feature can be activated through the Reset Button as described on Page 29 or through the KPW5 and KPW250 keypads (not provided).

To use the gate hold open feature:

1. Enter a valid 4-digit PIN when the gate is at the Open Limit and the timer is running
2. The Operator will chirp indicating the timer is canceled.

To restart the gate:

1. Re-enter the 4-digit PIN
2. Activate a Hard input or a programmed remote

Erase All Codes

1. Press and release the LEARN button (operator will beep and green XMITTER LED will light).
2. Press and hold the LEARN button again until the green XMITTER LED flashes and then release the button (approximately 6 seconds). All remote control codes are now erased.

To Remove and Erase Monitored Entrapment Protection Devices

1. Remove the entrapment protection device wires from the terminal block.
2. Press and release the OPEN LEFT and OPEN RIGHT buttons simultaneously. The handing direction LED will remain solid. The other direction LED will begin flashing (entering setup mode).
3. Press the OPEN LEFT and OPEN RIGHT buttons simultaneously to exit.

Gate operator setup examples

The following are example setups for the gate operator. Your specific site requirements may be different. Always setup the operator system to the site requirements, including all necessary entrapment protection devices.

RESIDENTIAL: One to four residential homes sharing a gated entrance/exit, allowing vehicle access trumps security concerns

COMMERCIAL/GENERAL ACCESS: A residential community (more than four homes) having one or more gated entrances/exits, allowing vehicle access trumps security concerns

COMMERCIAL: Business site where security (gate closed) is important

INDUSTRIAL: Large business site where security is required

SETTING	RESIDENTIAL	COMMERCIAL/GENERAL ACCESS	COMMERCIAL	INDUSTRIAL
Quick Close switch setting	Normally set to OFF. Normal gate close (timer or control).	Normally set to OFF. Normal gate close (timer or control).	Normally set to OFF. Normal gate close (timer or control).	Set to ON, so that gate closes immediately after vehicle passes CLOSE EYES/Interrupt loop.
Anti-Tail switch setting	Normally set to OFF. CLOSE EYES/Interrupt loop reverses a closing gate.	Normally set to OFF. CLOSE EYES/Interrupt loop reverses a closing gate.	Set to ON. In attempt to prevent vehicle tail-gating, CLOSE EYES/ Interrupt loop pauses a closing gate.	Set to ON. In attempt to prevent vehicle tail-gating, CLOSE EYES/ Interrupt loop pauses a closing gate.
Bipart Delay switch setting	For DUAL-GATE site, set to ON for gate that delays upon opening.	For DUAL-GATE site, set to ON for gate that delays upon opening.	For DUAL-GATE site, set to ON for gate that delays upon opening.	For DUAL-GATE site, set to ON for gate that delays upon opening.
Aux Relay Out – Open Limit Switch	Typically not required.	Use with SAMS (Sequence Access Management System).	1. Use with SAMS (Sequence Access Management System). 2. Connect “Gate Open” indicator (e.g. light).	1. Use with SAMS (Sequence Access Management System). 2. Connect “Gate Open” indicator (e.g. light).
Aux Relay Out – Close Limit Switch	Typically not required.	Typically not required.	Connect “Gate Close/Secure” indicator (e.g. light).	Connect “Gate Close/Secure” indicator (e.g. light).
Aux Relay Out – Gate Motion	Attach alert signal (audible or visual alert system).	Attach alert signal (audible or visual alert system).	Attach alert signal (audible or visual alert system).	Attach alert signal (audible or visual alert system).
Aux Relay Out – Pre-Motion Delay	Attach alert signal (audible or visual alert system).	Attach alert signal (audible or visual alert system).	Attach alert signal (audible or visual alert system).	Attach alert signal (audible or visual alert system).
Aux Relay Out – Tamper (Slide Gates Only)	Attach alert signal (audible or visual alert system) to indicate if gate is manually tampered with by being pushed off of close limit.	Attach alert signal (audible or visual alert system) to indicate if gate is manually tampered with by being pushed off of close limit.	Attach alert signal (audible or visual alert system) to indicate if gate is manually tampered with by being pushed off of close limit.	Attach alert signal (audible or visual alert system) to indicate if gate is manually tampered with by being pushed off of close limit.
Cycle Quantity Feedback	Use during servicing only to determine operator cycles.	Use during servicing only to determine operator cycles.	Use during servicing only to determine operator cycles.	Use during servicing only to determine operator cycles.
Fire Dept Open Input	Typically not required.	Connect emergency access system (Knox box switch, SOS system, etc.).	Typically not required.	Typically not required.
Heater Accessory (Models HTRNB and HTR460)	The heater keeps the gearbox and batteries at a suitable temperature when the outside temperature is below -4°F. The thermostat MUST be set between 45°F and 60°F to ensure proper gate operation.	The heater keeps the gearbox and batteries at a suitable temperature when the outside temperature is below -4°F. The thermostat MUST be set between 45°F and 60°F to ensure proper gate operation.	The heater keeps the gearbox and batteries at a suitable temperature when the outside temperature is below -4°F. The thermostat MUST be set between 45°F and 60°F to ensure proper gate operation.	The heater keeps the gearbox and batteries at a suitable temperature when the outside temperature is below -4°F. The thermostat MUST be set between 45°F and 60°F to ensure proper gate operation.

Dual Gate Settings

NOTE: *We recommend that all accessories and board configurations are set on the primary operator.*

Main Control Board

FEATURE	PRIMARY OPERATOR	SECONDARY OPERATOR
Timer-to-Close	Set the TTC dial to desired setting	OFF
Bi-Part Delay Switch	Bi-Part Delay: ON (will open last and close first) Tandem Mode: OFF	Bi-Part Delay: OFF (will open first and close last) Tandem Mode: OFF

ACCESSORY	PRIMARY OPERATOR	SECONDARY OPERATOR
Remote Controls	Program remote controls 1 to 50 to the primary operator.	Program remote controls 51 to 100 to the secondary operator
LiftMaster Internet Gateway	Program to primary operator.	
Garage and Gate Monitor	Program to primary operator.	

Expansion Board

FEATURE	PRIMARY OPERATOR	SECONDARY OPERATOR
QUICK CLOSE Switch	ON	OFF
ANTI-TAIL Switch	ON	OFF

IMPORTANT SAFETY INSTRUCTIONS

⚠ WARNING

To reduce the risk of SEVERE INJURY or DEATH:

- READ AND FOLLOW ALL INSTRUCTIONS.
- ANY maintenance to the operator or in the area near the operator MUST NOT be performed until disconnecting the electrical power (AC or solar and battery) and locking-out the power via the operator power switch. Upon completion of maintenance the area MUST be cleared and secured, at that time the unit may be returned to service.
- Disconnect power at the fuse box BEFORE proceeding. Operator MUST be properly grounded and connected in accordance with national and local electrical codes. ***NOTE:*** *The operator should be on a separate fused line of adequate capacity.*
- NEVER let children operate or play with gate controls. Keep the remote control away from children.
- ALWAYS keep people and objects away from the gate. NO ONE SHOULD CROSS THE PATH OF THE MOVING GATE.
- The entrance is for vehicles ONLY. Pedestrians MUST use separate entrance.
- Test the gate operator monthly. The gate MUST reverse on contact with an object or reverse when an object activates the noncontact sensors. After adjusting the force or the limit of travel, retest the gate operator. Failure to adjust and retest the gate operator properly can increase the risk of INJURY or DEATH.
- Use the manual disconnect release ONLY when the gate is NOT moving.
- KEEP GATES PROPERLY MAINTAINED. Read the owner's manual. Have a qualified service person make repairs to gate hardware.
- ALL maintenance MUST be performed by a LiftMaster professional.
- Activate gate ONLY when it can be seen clearly, is properly adjusted and there are no obstructions to gate travel.
- **SAVE THESE INSTRUCTIONS.**

⚠ WARNING

To protect against fire and electrocution:

- DISCONNECT power (AC or solar and battery) BEFORE installing or servicing operator.

For continued protection against fire:

- Replace ONLY with fuse of same type and rating.

Maintenance Chart

Disconnect all power to the operator before servicing.

DESCRIPTION	TASK	CHECK AT LEAST ONCE EVERY	
		MONTH	6 MONTHS
Entrapment Protection Devices	Check and test inherent (built into the operator) and external devices for proper operation	X	
Warning Signs	Make sure they are present and replace if worn or broken, see *Accessories*	X	
Manual Disconnect	Check and test for proper operation		X
Drive Chain and Sprockets	Check for excessive slack and lubricate	X	
Belt and Pulley	Check for excessive slack, wear or damage		X
Gate	Inspect for wear or damage; ensure it still complies with ASTM F2200, see page 5	X	
Accessories	Check all for proper operation		X
Electrical	Inspect all wire connections		X
Chassis Mounting Bolts	Check for tightness		X
Operator	Inspect for wear or damage		X

NOTES:

- Severe or high cycle usage will require more frequent maintenance checks.
- Limits may have to be reset after any major drive chain adjustments.
- If lubricating chain, use only lithium spray. Never use grease or silicone spray.
- It is suggested that while at the site voltage readings be taken at the operator. Using a digital voltmeter, verify that the incoming voltage to the operator is within ten percent of the operator's rating.
- Over time, the drive chain on the operator will stretch and need to be tightened. To tighten the drive chain adjust either of the two chain eye bolts. The chain should have no more than 1 inch of sag for every 10 feet of chain length.

TROUBLESHOOTING

⚠ WARNING

To protect against fire and electrocution:

- DISCONNECT power (AC or solar and battery) BEFORE installing or servicing operator.

For continued protection against fire:

- Replace ONLY with fuse of same type and rating.

Diagnostic Codes

To View the Codes

The codes will show on the diagnostic display.

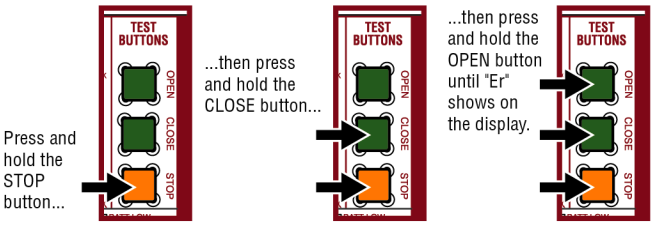

The operator will show the code sequence number followed by the code number:

CODE SEQUENCE NUMBER
The first number shown is the most recent code (example: "01"). The display will show the sequence of codes that occurred starting with "01" and going up to code "20".

A SECOND LATER....

CODE NUMBER
The second number shown after the code sequence number is the code itself (31-99, example" "31"). Refer to the chart on the following page for an explanation of each code.



To Scroll Through the Saved Codes

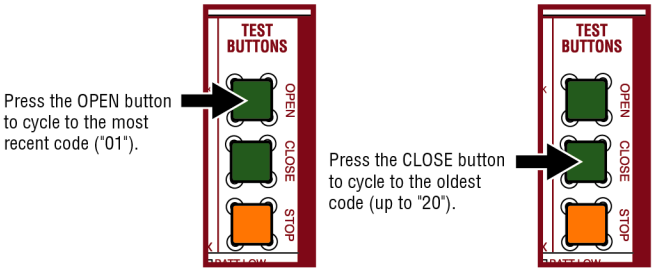

The operator will only keep track of up to 20 codes, then will start saving over the oldest codes as new codes occur.

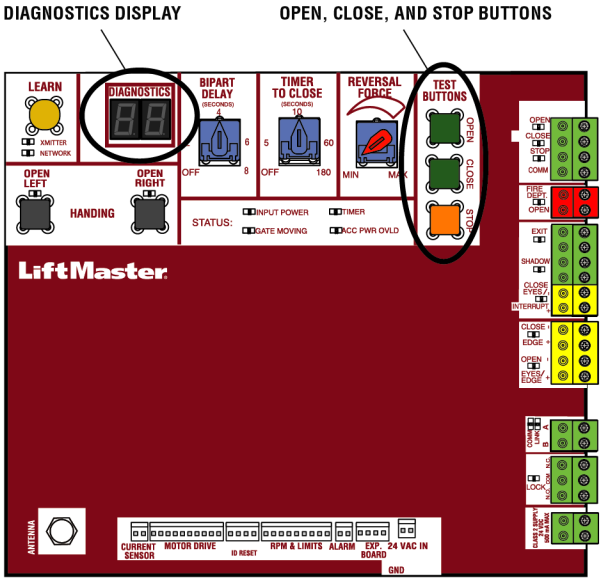

To Exit

Press and release the STOP button to exit. The display will also time out after two minutes of inactivity.

To Reset the Code History

1. Press and hold the STOP button for six seconds. The display will show "Er" then "CL" alternately for six seconds.
2. Release the STOP button. The code history has now been reset and the display will show "- -" until a new code occurs.
3. Press and release the STOP button to exit.

TROUBLESHOOTING

Diagnostic Codes Table

Some codes are saved in the code history and some are not. If a code is not saved it will briefly appear on the display as it occurs, then disappear.

LiftMaster System | Installed System | Informational | External Entrapment Protection | Inherent Entrapment Protection

Code	Meaning	Solution	Saved
31	Main control board has experienced an internal failure.	Disconnect all power, wait 15 seconds, then reconnect power (reboot). If issue continues, replace main control board.	NO
35	Max-Run-Time Exceeded Error	Check for an obstruction, then reprogram the limits.	YES
36	Product ID Error	Was the control board just replaced? If so, erase limits, enter limit setup mode and set limits. If not, disconnect all power, wait 15 seconds, then reconnect power before changing product ID harness.	YES
37	Product ID Failure	Unplug product ID harness then plug back in. Disconnect all power, wait 15 seconds, then reconnect power before replacing product ID harness.	YES
43	Exit Loop Error	Failure or missing loop (SHORT or OPEN - LiftMaster Plug-in Loop Detector only) Check loop wiring throughout connection. May be a short in the loop, or an open connection in the loop.	YES
44	Shadow Loop Error		
45	Interrupt Loop Error		
46	Wireless edge battery low	Replace batteries in wireless edge.	YES
47	Power board fault	Relay fault detected in the power board. Replace the power board.	YES
50	Run-Distance Error	The limits are less than the minimum requirement or longer than what was learned. Check limit positions and proper switch function. Run-distance can be re-learned by setting the handing again.	YES
53	Brownout occurred	AC/DC board supply dipped below allowable level. Review power supply and wiring. If rebooting, ensure enough time for discharge of power to force a fresh boot.	YES
54	Wireless Second Operator Communication Error	Check the second operator for power. If OFF, restore power and try to run the system. If powered, deactivate the wireless feature and then re-learn the second operator.	YES
55	System AC Overvoltage	Call utility.	YES
56	System AC Undervoltage	Check wiring and wire gauge to operator.	YES
57	Limit Error - Stuck Switch	Check switch for proper operation. Check harness for shorts. Replace if defective.	YES
58	Limit Error - Wrong Switch	Check motor wiring.	YES
59	Missing Power Board	Check harness for shorts. Check for presence of power board.	YES
60	Minimum number of monitored entrapment protection devices not installed.	Review monitored entrapment protection device connections. Slide gate operators require a minimum of two external safety devices; one in the close and one in the open direction.	NO
61	CLOSE EYE/INTERRUPT held more than 3 minutes	Check wired input on main control board; check for alignment or obstruction.	YES
62	CLOSE EDGE held more than 3 minutes		
63	OPEN EYE/EDGE held more than 3 minutes		
64	CLOSE EYE/INTERRUPT held more than 3 minutes	Check wired input on expansion board; check for alignment or obstruction. The photoelectric sensors may be installed too far apart.	YES
65	CLOSE EYE/EDGE held more than 3 minutes		
66	OPEN EYE/EDGE held more than 3 minutes		
67	Wireless edge triggered more than 3 minutes	Check wired input for wiring issue or obstruction.	YES
68	Wireless edge loss of monitoring	Check wireless edge inputs.	YES
69	Wireless edge triggered	IF an obstruction occurred, no action required. If an obstruction did NOT occur, check inputs and wiring.	NO

TROUBLESHOOTING

Code	Meaning	Solution	Saved
70	CLOSE EYE/INTERRUPT triggered, causing reversal, preventing close, or resetting TTC	IF an obstruction occurred, no action required. If an obstruction did NOT occur, check alignment, inputs, and wiring on main control board	NO
71	CLOSE EDGE triggered, causing reversal, NO preventing close, or canceling TTC		
72	OPEN EYE/EDGE triggered, causing reversal or preventing opening		
73	CLOSE EYE/INTERRUPT triggered, causing reversal, preventing close, or resetting TTC	IF an obstruction occurred, no action required. If an obstruction did NOT occur, check alignment, inputs, and wiring on expansion board.	NO
74	CLOSE EYE/EDGE triggered, causing reversal and preventing close or canceling TTC		
75	OPEN EYE/EDGE triggered, causing reversal or preventing opening		
80	Close input (EYE/EDGE) communication fault from other operator	Check inputs and communication method between operators, either wired bus or radio. Ensure operator is powered. May have to erase the wireless communication and reprogram the two operators.	YES
81	Open input (EYE/EDGE) communication fault from other operator		
82	Close input (EYE/EDGE) communication fault (expansion board)	Check the connections between the main board and the expansion board.	YES
83	Open input (EYE/EDGE) communication fault (expansion board)		
84	Non-monitored device detected on the wireless safety system	Non-monitored contact closure devices are not supported. Make sure connected devices are monitored. Check edges for proper orientation and resistive end cap connection.	YES
91	Force Reversal (Operator 1)	Check for obstruction. If no obstruction, check that the mechanical assembly is engaged and free to move. See section on Limit and Force Adjustment, and Obstruction Test.	YES
93	RPM / STALL Reversal (Operator 1)	Check for obstruction. If no obstruction, check the operator wiring and that the mechanical assembly is engaged and free to move. Replace APE assembly.	YES
95	AC motor no start condition	Motor start sequence failed. If the gate and motor are NOT moving, or moving too slow, check for an obstructed gate, binding in the mechanism, and relay board and start capacitor connections. If the gate and motor ARE moving, failure is due to loss of the encoder signal. Check the encoder cup and sensor on the limit shaft, and wiring.	YES
96	Current Sensor Fault	A fault was detected on the current sensor. Make sure the current sensor is connected to the main control board. Check the current sensor harness for an open or short. The operator will need a power cycle to resume operation after correcting the fault. If the fault continues, replace the power board.	YES
99	Normal Operation	No action required	YES

Operator Alarm

If a contact sensor detects an obstruction twice consecutively the alarm will sound (up to 5 minutes) and the operator will need to be reset.

When the inherent force of the operator (RPM/current sensor) detects the following (twice consecutively) the alarm will sound (up to 5 minutes) and the operator will need to be reset.

A. The gate is hitting a wall or vehicle.
B. The gate does not meet specifications.
C. Debris is on the gate's track such as mud, rocks, dirt, etc.
D. The gate has one or more broken axles or wheels.
E. The gate wheel is off the gate rail.

Remove any obstructions. Press the reset button to shut off the alarm and reset the operator. After the operator is reset, normal functions will resume.

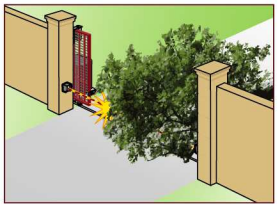



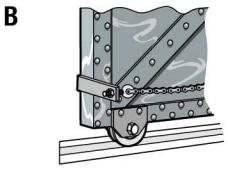

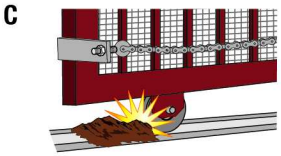

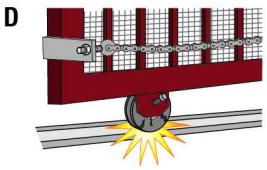

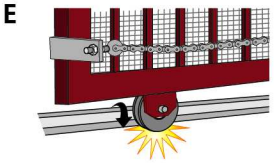

TROUBLESHOOTING

Troubleshooting Chart

SYMPTOM	POSSIBLE CAUSES	SOLUTIONS
Operator does not run and diagnostic display not on.	a. No power to control board b. Open fuse c. Defective control board	a. Check AC power b. Check fuses c. Replace defective control board
Control board powers up, but motor does not run.	a. Reset switch is stuck b. Stop button active or jumper not in place for stop circuit c. Open or Close input active d. Entrapment Protection Device active e. Vehicle loop detector or probe active f. Defective control board	a. Check reset switch b. Check Stop button is not “stuck on”, or verify that the stop button is a normally closed circuit, or put a jumper on the stop circuit. c. Check all Open and Close inputs for a “stuck on” input d. Check all Entrapment Protection Device inputs for a “stuck on” sensor e. Check all vehicle detector inputs for a “stuck on” detector f. Replace defective control board
Gate moves, but cannot set correct limits.	a. Gate does not move to a limit position b. Gate is too difficult to move c. Limits are set too close (slide gate applications only)	a. Use manual disconnect, manually move gate, and ensure gate moves easily limit to limit. Repair gate as needed. b. Gate must move easily and freely through its entire range, limit to limit. Repair gate as needed. c. Ensure the gate moves at least four feet between the OPEN limit and the CLOSE limit.
Gate does not fully open or fully close when setting limits.	a. Gate does not move to a limit position b. Gate is too difficult to move	a. Use manual disconnect, manually move gate, and ensure gate moves easily limit to limit. Repair gate as needed. b. Gate must move easily and freely through its entire range, limit to limit. Repair gate as needed.
Operator does not respond to a wired control/command (example: Open, Close, SBC, etc.)	a. Check Open and Close command input LEDs b. Stop button is active c. Reset button is stuck d. Entrapment Protection Device active e. Vehicle loop detector or vehicle probe active	a. Check all Open and Close inputs for a “stuck on” input b. Check Stop button is not “stuck on” c. Check Reset button d. Check all Entrapment Protection Device inputs for a “stuck on” sensor e. Check all vehicle detector inputs for a “stuck on” detector
Operator does not respond to a wireless control or transmitter	a. Check XMITTER LED when wireless control is active b. Stop button is active c. Reset button is stuck d. Poor radio reception	a. Activate wireless control and check XMITTER LED is on. Re-learn wireless control/transmitter to control board. Replace wireless control as needed. b. Check Stop button is not “stuck on” c. Check Reset button d. Check if similar wired control operates correctly. Check if wireless controls works properly when within a few feet of operator. Check operator’s antenna and antenna wire. Check other wireless controls or devices.
Gate stops during travel and reverses immediately.	a. Control (Open, Close) becoming active b. Vehicle loop detector active	a. Check all Open and Close inputs for an active input b. Check all vehicle detector inputs for an active detector
Gate opens, but will not close with transmitter or Timer-to-Close.	a. Open control active b. Vehicle loop detector active c. Fire Dept input active d. Timer-to-Close not set e. Close Entrapment Protection Device active	a. Check all Open inputs for an active input b. Check all vehicle detector inputs for an active detector c. Check Fire Dept input d. Check Timer-to-Close (TTC) setting e. Check all Entrapment Protection Device inputs for an active sensor
Gate closes, but will not open.	a. Vehicle loop detector active	a. Check all vehicle detector inputs for an active detector
Exit loop activation does not cause gate to open.	a. Exit vehicle detector setup incorrectly b. Defective Exit loop detector	a. Review Exit loop detector settings. Adjust settings as needed. b. Replace defective Exit loop detector.
Interrupt loop does not cause gate to stop and reverse.	a. Vehicle detector setup incorrectly b. Defective vehicle loop detector	a. Review Interrupt loop detector settings. Adjust settings as needed. b. Replace defective Interrupt loop detector.

TROUBLESHOOTING

SYMPTOM	POSSIBLE CAUSES	SOLUTIONS
Shadow loop does not keep gate at open limit.	a. Vehicle detector setup incorrectly b. Defective vehicle loop detector	a. Review Shadow loop detector settings. Adjust settings as needed. b. Replace defective Shadow loop detector.
Obstruction in gate's path does not cause gate to stop and reverse.	a. Force adjustment needed	a. Refer to the Adjustment section to conduct the obstruction test and perform the proper force adjustment that is needed.
Photoelectric sensor does not stop or reverse gate.	a. Incorrect photoelectric sensor wiring b. Defective photoelectric sensor c. Photoelectric sensors installed too far apart	a. Check photoelectric sensor wiring. Retest that obstructing photoelectric sensor causes moving gate to stop, and may reverse direction. b. Replace defective photoelectric sensor. Retest that obstructing photoelectric sensor causes moving gate to stop, and may reverse direction. c. Move the photoelectric sensors closer together or use edge sensors instead.
Edge Sensor does not stop or reverse gate.	a. Incorrect edge sensor wiring b. Defective edge sensor	a. Check edge sensor wiring. Retest that activating edge sensor causes moving gate to stop and reverse direction. b. Replace defective edge sensor. Retest that activating edge sensor causes moving gate to stop and reverse direction.
Alarm sounds for 5 minutes or alarm sounds with a command.	a. Double entrapment occurred (two obstructions within a single activation)	a. Check for cause of entrapment (obstruction) detection and correct. Press the reset button to shut off alarm and reset the operator.
On dual-gate system, incorrect gate opens first or closes first.	a. Incorrect Bipart switch setting	a. Change setting of both operator's Bipart switch settings. One operator should have Bipart switch ON (operator that opens second) and the other operator should have Bipart switch OFF (operator that opens first).
Alarm beeps when running.	a. Expansion board setting b. Constant pressure to open or close is given	a. Pre-warning is set to "ON" b. Constant pressure to open or closed is given
Expansion board function not controlling gate.	a. Defective main board to expansionboard wiring b. Incorrect input wiring to expansion board c. Defective expansion board or defective main board	a. Check main board to expansion board wiring. If required, replace wire cable. b. Check wiring to all inputs on expansion board. c. Replace defective expansion board or defective main board
Maglock not working correctly.	a. Maglock wired incorrectly	a. Check that Maglock is wired to N.C. and COM terminals. Check that Maglock has power (do not power maglock from control board accessory power terminals). If shorting lock's NO and COM wires does not activate Maglock, then replace Maglock or Maglock wiring (refer to Wiring Diagrams).
Solenoid lock not working correctly.	a. Solenoid wired incorrectly	a. Check that Solenoid is wired to N.O. and COM terminals. Check that Solenoid has power (do not power solenoid from control board accessory power terminals). If shorting lock's NC and COM wires does not activate Solenoid, then replace Solenoid lock or Solenoid wiring (refer to Wiring Diagrams).
Quick Close not working correctly.	a. Quick Close setting incorrect b. Interrupt loop detector c. Defective Expansion board	a. Check that Quick Close setting is ON b. Check operation of Interrupt Loop detector c. Replace defective Expansion board
Anti-Tailgating not working correctly.	a. Anti-Tail setting incorrect b. Interrupt loop detector c. Defective Expansion board	a. Check that Anti-Tail setting is ON b. Check operation of Interrupt Loop detector c. Replace defective Expansion board
AUX Relay not working correctly.	a. AUX Relay setting incorrect b. AUX Relay wiring incorrect c. Defective Expansion board	a. Check AUX Relay switches settings b. Check that wiring is connected to either N.O. and COM or to N.C. and COM. c. Set AUX Relay to another setting and test. Replace defective expansion board.

ACCESSORIES

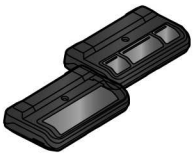

Universal single and 3-button remote controls

Ideal for applications requiring a large number of remote controls.

Models 811LM and 813LM

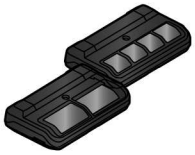

Security+ 2.0® learning remote controls

One button can control a gate operator and the other(s) can control garage door(s). It can also be programmed to Security+® or Security+ 2.0® code format.

Models 892LT and 894LT



LiftMaster® internet gateway

Internet enabled accessory which connects to the computer and allows you to monitor and control gate operators and lighting accessories enabled by MyQ® technology.

Model 828LM



LiftMaster Cloud™ connected access protocol - high capacity

Model CAPXL

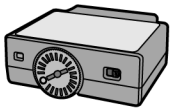

Plug-in loop detector

Low power. Conveniently plugs into existing control board.

Model LOOPDETLM

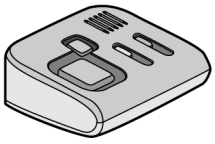

LiftMaster door and gate monitor

Model 829LM

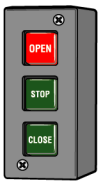

3-button control station

Model 02-103

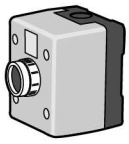

Stop Button

Model AEXITP

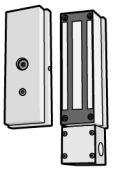

LiftMaster elite series maglock package

Model MG1300RLYPKG

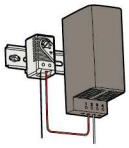

Heater kit accessory

Model HTRNB

Model HTR460 for 460V applications



VGroove power wheels

Models AH112 (4"), AH117 (5"), AH113 (6"), AH103 (optional mounting brackets)

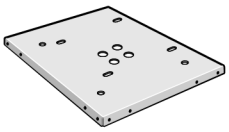

Post-mounting plate

For post-mounting models CSL24UL and SL3000 commercial slide gate operators. Posts not included.

Model MPEL

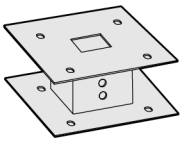

Steel stand for mounting to concrete pad

Model MSEL



Warning sign

Model 40-3505



Transformer kit

Changes input voltage (208/240/480/575 Vac) to an output voltage of 120 Vac. Rated 208/240/480/575 Vac, 4.8/4.2/2.1/1.7 A, 60 Hz, 1 PH

Model 3PHCONV

ACCESSORIES

Entrapment protection

If the gate opening distance is greater than the maximum separation distance of the photoelectric sensors, then edge sensors MUST BE USED. Refer to the photoelectric sensor instructions for maximum separation distance.

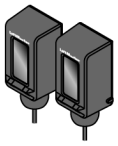

LiftMaster monitored through beam photoelectric sensor
Model LMTBUL

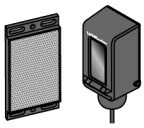

LiftMaster monitored retro-reflective photoelectric sensor
Model LMRRUL

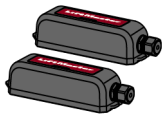

LiftMaster monitored wireless edge kit (transmitter and receiver)
Model LMWEKITU

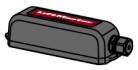

LiftMaster monitored wireless edge transmitter
Model LMWETXU



Large profile monitored edge (82 ft. roll)
Model L50
Large profile ends kit (10 pair)
Model L50E
Small profile monitored edge (82 ft. roll)
Model S50
Small profile ends kit (10 pair)
Model S50E

Plastic channel
8 ft. (2.4 m) for both small and large profile edges (pack of 10).
Model L50CHP
Aluminum channel for edge (pack of 8)
10 ft. (3.1 m) for small and large profile edges.
Model L50CHAL
LiftMaster large profile monitored edges (4ft.,5ft., 6ft.)
Model L504AL, L505AL, L506AL
LiftMaster small profile monitored edges (4ft.,5ft., 6ft.)
Model S504AL, S505AL, S506AL
Edge cutting tool
Model ETOOL
Wraparound round monitored edge (4 ft., 5 ft., 6 ft.)
Models WR4, WR5, WR6
Wraparound square monitored edge (4 ft.,5 ft., 6 ft.)
Models WS4, WS5, WS6

REPAIR PARTS

REPAIR PARTS (NOT SHOWN)	
#41 Chain (10 feet)	19-41240D
#40 Chain (10 feet)	19-40240D
#41 Chain (Nickel Plated)	19-41240D-NP
#41 Master Link	19-50307
#40 Master Link	19-50310
Plastic Standoffs for main control board (10 per bag)	K77-37683
Wire Harnesses (main board to power board, main board to ground, main board to transformer, and power board to transformer)	K77-37693
Wire Harness (main board to expansion board)	K94-34778
Reset Switch with ID	K94-37468
Hardware Kit (chain bolt and chain bracket)	K77-36764
Chain Bolt	K07-50637

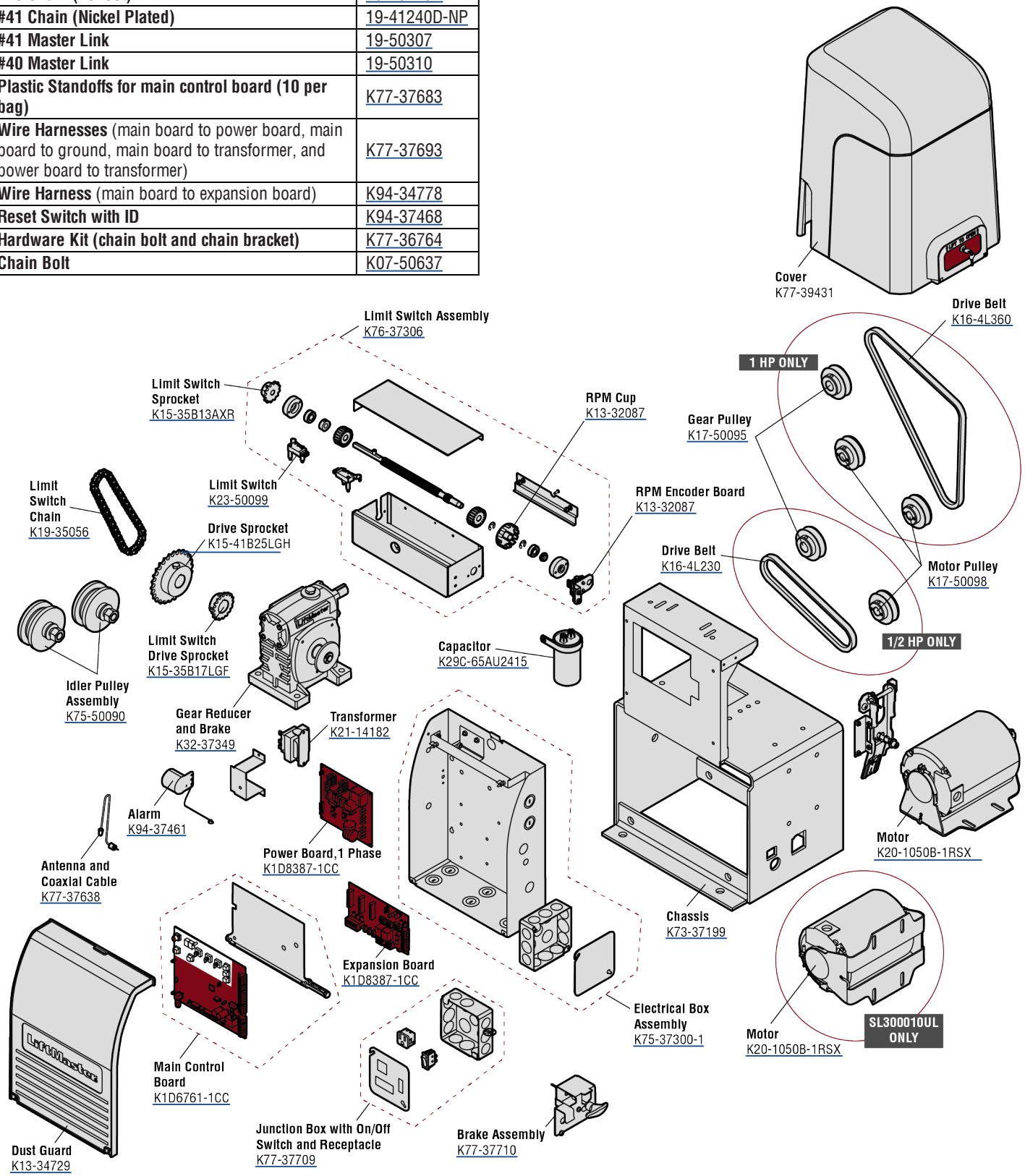

Blue-underlined parts are clickable — order online at GateHouseSupplies.com

WARRANTY

LiftMaster 7 Year residential / 5 Year Commercial Limited Warranty

LiftMaster ("Seller") warrants to the first purchaser of this product, for the structure in which this product is originally installed, that it is free from defect in materials and/or workmanship for a period of 7 Year residential / 5 Year Commercial from the date of purchase [and that the SL3000UL is free from defect in materials and/or workmanship for a period of 7 Year residential / 5 Year Commercial from the date of purchase]. The proper operation of this product is dependent on your compliance with the instructions regarding installation, operation, maintenance and testing. Failure to comply strictly with those instructions will void this limited warranty in its entirety.

If, during the limited warranty period, this product appears to contain a defect covered by this limited warranty, call **1-800-528-2806**, toll free, before dismantling this product. Then send this product, pre-paid and insured, to our service center for warranty repair. You will be advised of shipping instructions when you call. Please include a brief description of the problem and a dated proof-of-purchase receipt with any product returned for warranty repair. Products returned to Seller for warranty repair, which upon receipt by Seller are confirmed to be defective and covered by this limited warranty, will be repaired or replaced (at Seller's sole option) at no cost to you and returned pre-paid. Defective parts will be repaired or replaced with new or factory-rebuilt parts at Seller's sole option.

ALL IMPLIED WARRANTIES FOR THE PRODUCT, INCLUDING BUT NOT LIMITED TO ANY IMPLIED WARRANTIES OF MERCHANTABILITY AND FITNESS FOR A PARTICULAR PURPOSE, ARE LIMITED IN DURATION TO THE 7 YEAR RESIDENTIAL / 5 YEAR COMMERCIAL LIMITED WARRANTY PERIOD SET FORTH ABOVE [EXCEPT THE IMPLIED WARRANTIES WITH RESPECT TO THE SL3000UL, WHICH ARE LIMITED IN DURATION TO THE 7 YEAR RESIDENTIAL / 5 YEAR COMMERCIAL LIMITED WARRANTY PERIOD FOR THE SL3000UL, AND NO IMPLIED WARRANTIES WILL EXIST OR APPLY AFTER SUCH PERIOD. Some states do not allow limitations on how long an implied warranty lasts, so the above limitation may not apply to you. THIS LIMITED WARRANTY DOES NOT COVER NON-DEFECT DAMAGE, DAMAGE CAUSED BY IMPROPER INSTALLATION, OPERATION OR CARE (INCLUDING, BUT NOT LIMITED TO ABUSE, MISUSE, FAILURE TO PROVIDE REASONABLE AND NECESSARY MAINTENANCE, UNAUTHORIZED REPAIRS OR ANY ALTERATIONS TO THIS PRODUCT), LABOR CHARGES FOR REINSTALLING A REPAIRED OR REPLACED UNIT, OR REPLACEMENT OF BATTERIES.

THIS LIMITED WARRANTY DOES NOT COVER ANY PROBLEMS WITH, OR RELATING TO, THE GATE OR GATE HARDWARE, INCLUDING BUT NOT LIMITED TO THE GATE SPRINGS, GATE ROLLERS, GATE ALIGNMENT OR HINGES. THIS LIMITED WARRANTY ALSO DOES NOT COVER ANY PROBLEMS CAUSED BY INTERFERENCE. ANY SERVICE CALL THAT DETERMINES THE PROBLEM HAS BEEN CAUSED BY ANY OF THESE ITEMS COULD RESULT IN A FEE TO YOU.

UNDER NO CIRCUMSTANCES SHALL SELLER BE LIABLE FOR CONSEQUENTIAL, INCIDENTAL OR SPECIAL DAMAGES ARISING IN CONNECTION WITH USE, OR INABILITY TO USE, THIS PRODUCT. IN NO EVENT SHALL SELLER'S LIABILITY FOR BREACH OF WARRANTY, BREACH OF CONTRACT, NEGLIGENCE OR STRICT LIABILITY EXCEED THE COST OF THE PRODUCT COVERED HEREBY. NO PERSON IS AUTHORIZED TO ASSUME FOR US ANY OTHER LIABILITY IN CONNECTION WITH THE SALE OF THIS PRODUCT.

Some states do not allow the exclusion or limitation of consequential, incidental or special damages, so the above limitation or exclusion may not apply to you. This limited warranty gives you specific legal rights, and you may also have other rights which vary from state to state.

NOTES

300 Windsor Drive
Oak Brook, IL 60523
LiftMaster.com

© 2018, The Chamberlain Group, Inc. - All Rights Reserved

01-39375B