LiftMaster®
ELITE SERIES™

RSW12V™ & RSW12VH™

VEHICULAR SWING GATE OPERATOR

INSTALLATION MANUAL

SOLAR CAPABLE
SEE ACCESSORIES.

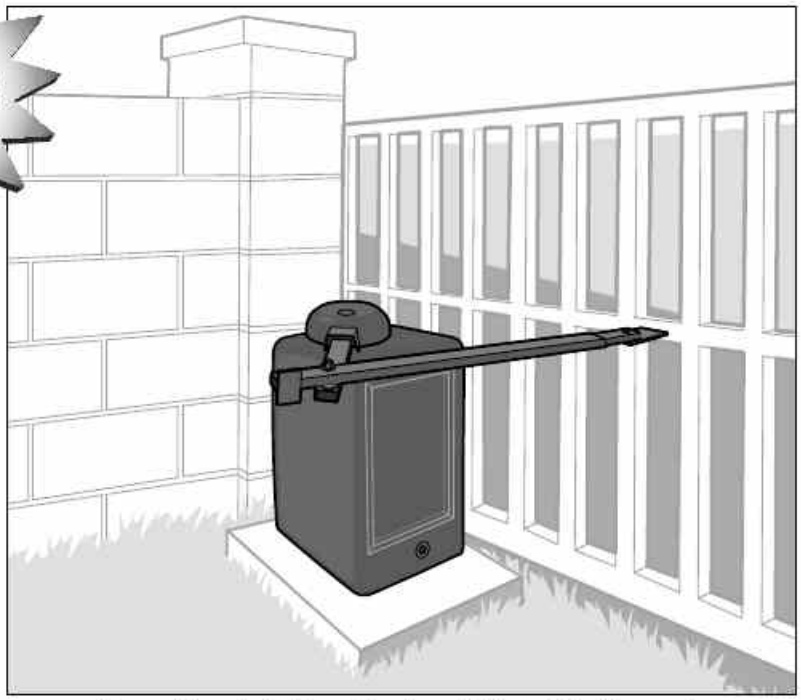

Your model may look different than the model illustrated in this manual.

STOP

IMPORTANT NOTE: *The gate operation may be limited until the battery is fully charged.*

THIS PRODUCT IS TO BE INSTALLED AND SERVICED BY A TRAINED GATE SYSTEMS TECHNICIAN ONLY.

Visit www.liftmaster.com to locate a professional installing dealer in your area.

This model is for use on vehicular passage gates ONLY and not intended for use on pedestrian passage gates.

This model is intended for use in Class I and Class II vehicular swing gate applications.

UL325 compliant

c UL us LISTED

UL991 compliant

TABLE OF CONTENTS

SAFETY 1-7

Safety Symbol and Signal Word Review 1
UL325 Model Classifications 2
Safety Installation Information 3
Gate Construction Information 4
Required Safety Protection Devices 5
Important Safety Information 6-7

INTRODUCTION 8

Operator Specifications 8
Carton Inventory 8
Hardware Inventory 8

INSTALLATION 9-14

Site Preparation 9
Types of Installations 9
Standard Installation 10-11
Compact Installation Only 12-13
Standard and Compact Installation 14

WIRING 14-17

Earth Ground Rod 14
Power Wiring 15-16
Connect Batteries 16
Primary/Secondary Operators 17

ADJUSTMENT 18-23

Learn Limits 18-22
Force Adjustment 23
Test 23

PROGRAMMING 24

Remote Controls 24
Keyless Entry 24
Erase All Codes 24
Alternate Radio Receiver Installation 24

ADDITIONAL FEATURES 25-26

Timer-To-Close 25
Auto Open Jumper 25
Heater 25
Party Mode 25
Entrapment Protection Devices 26

OPERATION AND MAINTENANCE 27-28

Manual Disconnect 27
Reset Button 27
Remote Control 27
Sleep Mode 27
Maintenance 28
Battery 28

TROUBLESHOOTING 29-30

Diagnostic Error Codes Chart 29
Troubleshooting Chart 30-31
Wiring Diagram 32

ACCESSORIES 33-34

WARRANTY BACK COVER

SAFETY » SAFETY SYMBOL AND SIGNAL WORD REVIEW

When you see these Safety Symbols and Signal Words on the following pages, they will alert you to the possibility of serious injury or death if you do not comply with the warnings that accompany them. The hazard may come from something mechanical or from electric shock. Read the warnings carefully.

When you see this Signal Word on the following pages, it will alert you to the possibility of damage to your gate and/or the gate operator if you do not comply with the cautionary statements that accompany it. Read them carefully.

IMPORTANT NOTE

- *BEFORE attempting to install, operate or maintain the operator, you must read and fully understand this manual and follow all safety instructions.*
- *DO NOT attempt repair or service of your gate operator unless you are an Authorized Service Technician.*

⚠ WARNING

MECHANICAL

⚠ WARNING

ELECTRICAL

CAUTION

SAFETY » UL325 MODEL CLASSIFICATIONS

CLASS I – RESIDENTIAL VEHICULAR GATE OPERATOR

A vehicular gate operator (or system) intended for use in a home of one-to four single family dwellings, or a garage or parking area associated therewith.

I



CLASS II – COMMERCIAL/GENERAL ACCESS VEHICULAR GATE OPERATOR

A vehicular gate operator (or system) intended for use in a commercial location or building such as a multi-family housing unit (five or more single family units) hotel, garage, retail store or other building servicing the general public.

II



UL325 ENTRAPMENT PROTECTION REQUIREMENTS

This chart illustrates the entrapment protection requirements for the UL325 classes.

GATE OPERATOR ENTRAPMENT PROTECTION		
UL325 Classification	Swing Gate Operator	
	Primary Type	Secondary Type
CLASS I CLASS II	A	B1 or B2

In order to complete a proper installation you must satisfy the entrapment protection chart shown. That means that the installation must have one primary means of entrapment protection and one independent secondary means of entrapment protection. Both primary and secondary entrapment protection methods must be designed, arranged or configured to protect against entrapments in both the open and close directions of gate travel.

- Type A - Inherent (built into the operator) entrapment sensing and at least one of the following as your secondary entrapment protection:
- Type B1 - Non-contact sensors such as photoelectric sensors,
- Type B2 - Contact sensors such as gate edges

NOTE: *UL requires that all installations must have warning signs placed in plain view on both sides of the gate to warn pedestrians of the dangers of motorized gate systems.*

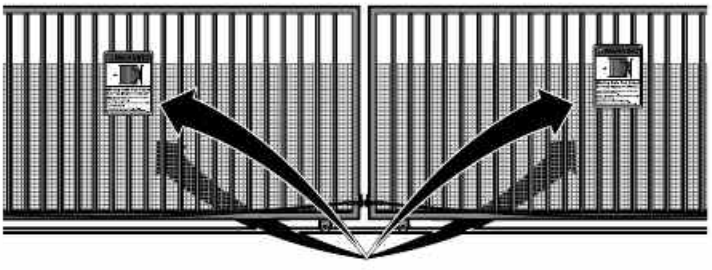

SAFETY » SAFETY INSTALLATION INFORMATION

1. Vehicular gate systems provide convenience and security. Gate systems are comprised of many component parts. The gate operator is only one component. Each gate system is specifically designed for an individual application.

2. Gate operating system designers, installers and users must take into account the possible hazards associated with each individual application. Improperly designed, installed or maintained systems can create risks for the user as well as the bystander. Gate systems design and installation must reduce public exposure to potential hazards.

3. A gate operator can create high levels of force in its function as a component part of a gate system. Therefore, safety features must be incorporated into every design. Specific safety features include:
   - Gate Edges
   - Photoelectric Sensors
   - Vertical Posts
   - Guards for Exposed Rollers
   - Screen Mesh
   - Instructional and Precautionary Signage

4. Install the gate operator only when:
   a. The operator is appropriate for the construction and the usage class of the gate.
   b. All openings of a horizontal slide gate are guarded or screened from the bottom of the gate to a minimum of 4 feet (1.2 m) above the ground to prevent a 2-1/4 inches (6 cm) diameter sphere from passing through the openings anywhere in the gate, and in that portion of the adjacent fence that the gate covers in the open position.



   c. All exposed pinch points are eliminated or guarded, and guarding is supplied for exposed rollers.

5. The operator is intended for installation only on gates used for vehicles. Pedestrians must be supplied with a separate access opening. The pedestrian access opening shall be designed to promote pedestrian usage. Locate the gate such that persons will not come in contact with the vehicular gate during the entire path of travel of the vehicular gate.



6. The gate must be installed in a location so that enough clearance is supplied between the gate and adjacent structures when opening and closing to reduce the risk of entrapment. Swinging gates shall not open into public access areas.

7. The gate must be properly installed and work freely in both directions prior to the installation of the gate operator.

8. Controls intended for user activation must be located at least 6 feet (1.8 m) away from any moving part of the gate and where the user is prevented from reaching over, under, around or through the gate to operate the controls. Outdoor or easily accessible controls shall have a security feature to prevent unauthorized use.



9. The Stop and/or Reset (if provided separately) must be located in the line-of-sight of the gate. Activation of the reset control shall not cause the operator to start.

10. A minimum of two (2) WARNING SIGNS shall be installed, one on each side of the gate where easily visible.

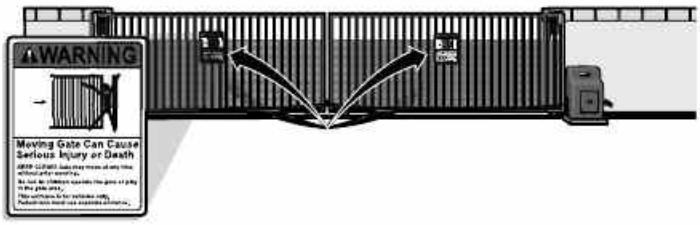

11. For a gate operator utilizing a non-contact sensor:
    a. Reference owner's manual regarding placement of non-contact sensor for each type of application.
    b. Care shall be exercised to reduce the risk of nuisance tripping, such as when a vehicle trips the sensor while the gate is still moving.
    c. One or more non-contact sensors shall be located where the risk of entrapment or obstruction exists, such as the perimeter reachable by a moving gate or barrier.

12. For a gate operator utilizing a contact sensor such as an edge sensor:
    a. One or more contact sensors shall be located where the risk of entrapment or obstruction exists, such as at the leading edge, trailing edge and post mounted both inside and outside of a vehicular horizontal slide gate.
    b. One or more contact sensors shall be located at the bottom edge of a vehicular vertical lift gate.
    c. A hard wired contact sensor shall be located and its wiring arranged so the communication between the sensor and the gate operator is not subject to mechanical damage.
    d. A wireless contact sensor such as the one that transmits radio frequency (RF) signals to the gate operator for entrapment protection functions shall be located where the transmission of the signals are not obstructed or impeded by building structures, natural landscaping or similar obstruction. A wireless contact sensor shall function under the intended end-use conditions.
    e. One or more contact sensors shall be located on the inside and outside leading edge of a swing gate. Additionally, if the bottom edge of a swing gate is greater than 6 inches (152 mm) above the ground at any point in its arc of travel, one or more contact sensors shall be located on the bottom edge.
    f. One or more contact sensors shall be located at the bottom edge of a vertical barrier (arm).

SAFETY » GATE CONSTRUCTION INFORMATION

Vehicular gates should be installed in accordance with ASTM F2200: Standard Specification for Automated Vehicular Gate Construction. For a copy, contact ASTM directly at 610-832-9585 or www.astm.org.

1. GENERAL REQUIREMENTS

1.1 Gates shall be constructed in accordance with the provisions given for the appropriate gate type listed, refer to ASTM F2200 for additional gate types.

1.2 Gates shall be designed, constructed and installed to not fall over more than 45 degrees from the vertical plane, when a gate is detached from the supporting hardware.

1.3 Gates shall have smooth bottom edges, with vertical bottom edged protrusions not exceeding 0.50 inches (12.7 mm) when other than the exceptions listed in ASTM F2200.

1.4 The minimum height for barbed tape shall not be less than 8 feet (2.44 m) above grade and for barbed wire shall not be less than 6 feet (1.83 m) above grade.

1.5 An existing gate latch shall be disabled when a manually operated gate is retrofitted with a powered gate operator.

1.6 A gate latch shall not be installed on an automatically operated gate.

1.7 Protrusions shall not be permitted on any gate, refer to ASTM F2200 for Exceptions.

1.8 Gates shall be designed, constructed and installed such that their movement shall not be initiated by gravity when an automatic operator is disconnected.

1.9 A pedestrian gate shall not be incorporated into a vehicular gate panel or that portion of the adjacent fence that the gate covers in the open position.

2. SPECIFIC APPLICATIONS

2.1 Any non-automated gate that is to be automated shall be upgraded to conform to the provisions of this specification.

2.2 This specification shall not apply to gates generally used for pedestrian access and to vehicular gates not to be automated.

2.3 Any existing automated gate, when the operator requires replacement, shall be upgraded to conform to the provisions of this specification in effect at that time.

3. VEHICULAR HORIZONTAL SLIDE GATES

3.1 The following provisions shall apply to Class I, Class II and Class III vehicular horizontal slide gates:

3.1.1 All weight bearing exposed rollers 8 feet (2.44 m), or less, above grade shall be guarded or covered.

3.1.2 All openings located between 48 inches (1.22 m) and 72 inches (1.83 m) above grade shall be designed, guarded or screened to prevent a 4 inch (102 mm) diameter sphere from passing through the openings anywhere in the gate, and in that portion of the adjacent fence that covers in the open position.

3.1.3 A gap, measured in the horizontal plane parallel to the roadway, between a fixed stationary object nearest the roadway, (such as a gate support post) and the gate frame when the gate is in either the fully open position or the fully closed position, shall not exceed 2 1/4 inches (57 mm), refer to ASTM F2200 for Exception.

3.1.4 Positive stops shall be required to limit travel to the designed fully open and fully closed positions. These stops shall be installed at either the top of the gate, or at the bottom of the gate where such stops shall horizontally or vertically project no more than is required to perform their intended function.

3.1.5 All gates shall be designed with sufficient lateral stability to assure that the gate will enter a receiver guide, refer to ASTM F2200 for panel types.

3.2 The following provisions shall apply to Class IV vehicular horizontal slide gates:

3.2.1 All weight bearing exposed rollers 8 feet (2.44 m), or less, above grade shall be guarded or covered.

3.2.2 Positive stops shall be required to limit travel to the designed fully open and fully closed positions. These stops shall be installed at either the top of the gate, or at the bottom of the gate where such stops shall horizontally or vertically project no more than is required to perform their intended function.

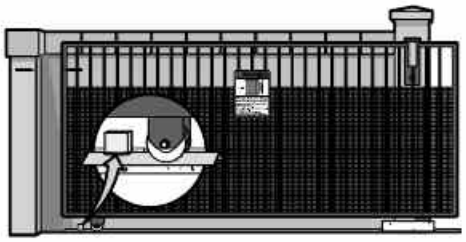

4. VEHICULAR HORIZONTAL SWING GATES

4.1 The following provisions shall apply to Class 1, Class II and Class III vehicular horizontal swing gates:

4.1.1 Gates shall be designed, constructed and installed so as not to create an entrapment area between the gate and the supporting structure or other fixed object when the gate moves toward the fully open position, subject to the provisions in the 4.1.1.1 and 4.1.1.2.

4.1.1.1 The width of an object (such as a wall, pillar or column) covered by a swing gate when in the open position shall not exceed 4 inches (102 mm), measured from the centerline of the pivot point of the gate, refer to ASTM F2200 for exception.

4.1.1.2 Except for the zone specified in Section 4.1.1.1, the distance between a fixed object such as a wall, pillar or column, and a swing gate when in the open position shall not be less than 16 inches (406 mm), refer to ASTM F2200 for exception.

4.2 Class IV vehicular horizontal swing gates shall be designed, constructed and installed in accordance with security related parameters specific to the application in question.

SAFETY » REQUIRED SAFETY PROTECTION DEVICES

⚠ WARNING

To prevent SERIOUS INJURY or DEATH from a moving gate:

- Entrapment protection devices MUST be installed to protect anyone who may come near a moving gate.
- Locate entrapment protection devices to protect in BOTH the open and close gate cycles.
- Locate entrapment protection devices to protect between moving gate and RIGID objects, such as posts or walls.

Install photoelectric sensors and edge sensors to protect against any entrapment or safety conditions encountered in your gate application.

The safety loops allow the gate to stay open when vehicles are obstructing the gate path. Suggested for vehicles 14 feet (4.27 m) or longer. Safety loops are not required safety devices but are recommended.

NON-CONTACT SENSORS

Use photoelectric sensor model 50-220.

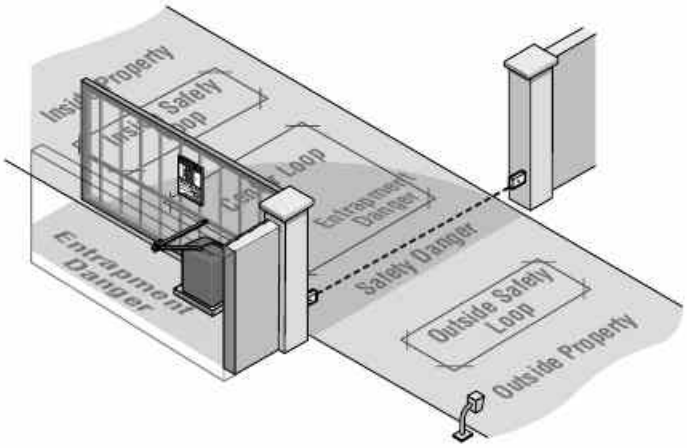

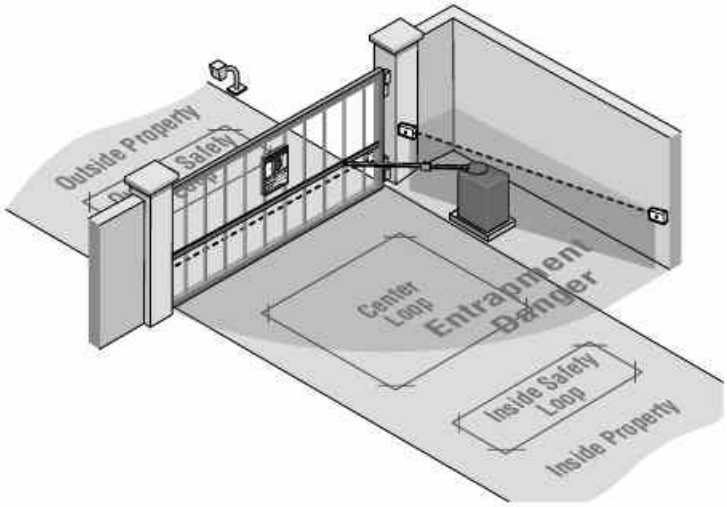

CONTACT SENSORS (EDGE SENSORS)

Use edge sensor models G65MG0204, G65MG0205, G65MGR205, or G65MGS205 (2-wire, non-monitored).

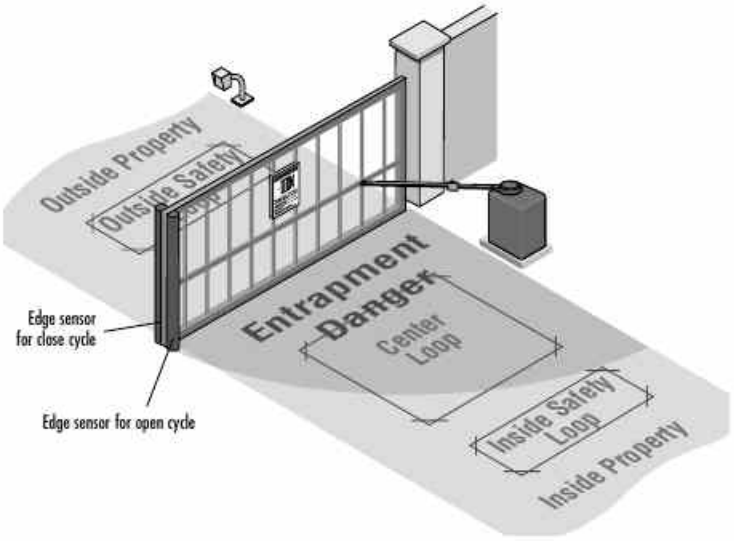

SAFETY » IMPORTANT SAFETY INFORMATION

INSTALLATION

⚠⚠ WARNING

To prevent SERIOUS INJURY or DEATH from a moving gate:

- Pinch points must be guarded at all times. Install enclosed-style gate tracks and roller guards.
- Place screen mesh 4 feet (1.2 m) high on the gate to prevent access through openings anywhere the gate may travel.
- Mount controls at least 6 feet (1.8 m) from the gate or ANY moving part of the gate.
- Install Warning signs on EACH side of gate in PLAIN VIEW. Permanently secure each Warning sign in a suitable manner using fastening holes.
- This operator is intended for vehicular use only. To prevent INJURY to pedestrians, a separate pedestrian access should be supplied, visible from the gate. Locate the pedestrian access where there is not a chance of INJURY at any point during full movement of the gate.
- Contact sensors MUST be located at the leading and trailing edges, and post mounted both inside and outside a horizontal slide gate. Non-contact sensors such as photo eyes MUST be mounted across the gate opening and operate during BOTH the open and close cycles.
- Entrapment protection devices MUST be installed to protect anyone who may come near a moving gate.
- Locate entrapment protection devices to protect in BOTH the open and close gate cycles.
- Locate entrapment protection devices to protect between moving gate and RIGID objects, such as posts or walls.
- Too much force on gate will interfere with proper operation of safety reversal system.
- NEVER increase force beyond minimum amount required to close gate.
- NEVER use force adjustments to compensate for a binding or sticking gate.
- If one control (force or travel limits) is adjusted, the other control may also need adjustment.
- After ANY adjustments are made, the safety reversal system MUST be tested. Gate MUST reverse on contact with a rigid object.
- DO NOT touch the heater when switch is on, heater may be hot.

CAUTION

- To AVOID damaging gas, power or other underground utility lines, contact underground utility locating companies BEFORE digging more than 18 inches (46 cm) deep.
- To prevent damage to the operator or gate, DO NOT drive the limit actuators on the shaft past their normal positions.
- ALWAYS wear protective gloves and eye protection when changing the battery or working around the battery compartment.

WIRING

⚠⚠ WARNING

To reduce the risk of SEVERE INJURY or DEATH:

- ANY maintenance to the operator or in the area near the operator MUST NOT be performed until disconnecting the electrical power and locking-out the power via the operator power switch. Upon completion of maintenance the area MUST be cleared and secured, at that time the unit may be returned to service.
- Disconnect power at the fuse box BEFORE proceeding. Operator MUST be properly grounded and connected in accordance with national and local electrical codes. ***NOTE:*** *The operator should be on a separate fused line of adequate capacity.*
- ALL electrical connections MUST be made by a qualified individual.
- DO NOT install ANY wiring or attempt to run the operator without consulting the wiring diagram. We recommend that you install an optional reversing edge BEFORE proceeding with the control station installation.
- ALL power wiring should be on a dedicated circuit and well protected. The location of the power disconnect should be visible and clearly labeled.
- ALL power and control wiring MUST be run in separate conduit.

ADJUSTMENT

⚠ WARNING

To reduce the risk of SEVERE INJURY or DEATH:

- Without a properly installed safety reversal system, persons (particularly small children) could be SERIOUSLY INJURED or KILLED by a moving gate.
- Too much force on gate will interfere with proper operation of safety reversal system.
- NEVER increase force beyond minimum amount required to close gate.
- NEVER use force adjustments to compensate for a binding or sticking gate.
- If one control (force or travel limits) is adjusted, the other control may also need adjustment.
- After ANY adjustments are made, the safety reversal system MUST be tested. Gate MUST reverse on contact with a rigid object.

ADDITIONAL FEATURES

⚠ WARNING

To prevent SERIOUS INJURY or DEATH from a moving gate:

- Entrapment protection devices MUST be installed to protect anyone who may come near a moving gate.
- Locate entrapment protection devices to protect in BOTH the open and close gate cycles.
- Locate entrapment protection devices to protect between moving gate and RIGID objects, such as posts or walls.

MAINTENANCE AND OPERATION

⚠⚠ WARNING

To reduce the risk of SEVERE INJURY or DEATH:

- READ AND FOLLOW ALL INSTRUCTIONS.
- ANY maintenance to the operator or in the area near the operator MUST NOT be performed until disconnecting the electrical power and locking-out the power via the operator power switch. Upon completion of maintenance the area MUST be cleared and secured, at that time the unit may be returned to service.
- Disconnect power at the fuse box BEFORE proceeding. Operator MUST be properly grounded and connected in accordance with national and local electrical codes. ***NOTE:*** *The operator should be on a separate fused line of adequate capacity.*
- NEVER let children operate or play with gate controls. Keep the remote control away from children.
- ALWAYS keep people and objects away from the gate. NO ONE SHOULD CROSS THE PATH OF THE MOVING GATE.
- Test the gate operator monthly. The gate MUST reverse on contact with a rigid object or stop when an object activates the non-contact sensors. After adjusting the force or the limit of travel, retest the gate operator. Failure to adjust and retest the gate operator properly can increase the risk of INJURY or DEATH.
- Use the emergency release ONLY when the gate is not moving.
- KEEP GATES PROPERLY MAINTAINED. Read the owner's manual. Have a qualified service person make repairs to gate hardware.
- ALL maintenance MUST be performed by a LiftMaster professional.
- Activate gate or door ONLY when it can be seen clearly, is properly adjusted and there are no obstructions to door travel.
- To reduce the risk of FIRE or INJURY to persons use ONLY LiftMaster part 29-NP712 for replacement batteries.
- SAVE THESE INSTRUCTIONS.

CAUTION

- ALWAYS wear protective gloves and eye protection when changing the battery or working around the battery compartment.

TROUBLESHOOTING

⚠ WARNING

To protect against fire and electrocution:

- DISCONNECT power and battery BEFORE installing or servicing operator.

For continued protection against fire:

- Replace ONLY with fuse of same type and rating.

OPERATOR SPECIFICATIONS

This model is intended for use in vehicular swing gate applications:

Gate Classifications:	**CLASS I & II**
Main Supply (Motor):	**12 Vdc**
Accessory Power:	**12 V nominal Class II battery voltage source is limited to:** **• Solar or AC Cable up to 50 feet - 500 mA** **• AC Cable 50 feet up to 250 feet - 250 mA** **• AC Cable 250 feet up to 1000 feet - 100 mA** ***NOTE:*** *Increased accessory power drawn from the operator will shorten the battery life.*
Current Consumption:	**5 Amps at 120 Vac**
Battery Charger Supply:	**13.5 Vac, 30 Va, Direct Plug in Power Supply, Class II Compliant**
Heater Draw (Optional):	**325 watts**
Main AC Supply:	**120 Vac**
DC Absorbed Power:	**2 Amps**
Solar Power Max:	**12 V at 30 watts max.**
Maximum Gate Weight/Length:	**400 lbs. / 16 ft. long** **600 lbs. / 12 ft. long** **700 lbs. / 10 ft. long** **800 lbs. / 8 ft. long** **1000 lbs. / 6 ft. long**
Daily Cycle Rate using transformer power:	**250 cycles/day**
Maximum Gate Travel Range:	**115 degrees**
Temperature:	**-20°C to 40°C (-4°F to 104°F) without Heater** **-40°C to 40°C (-40°F to 104°F) with Heater**
Control Board Fuse:	**30 Amp (2)**

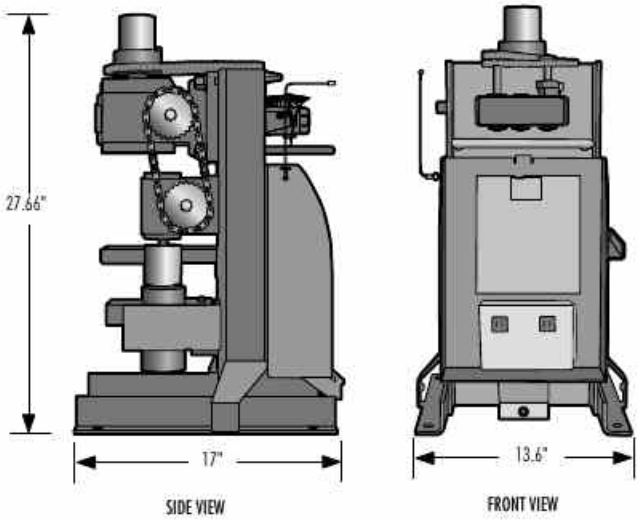

MOUNTING FOOTPRINT

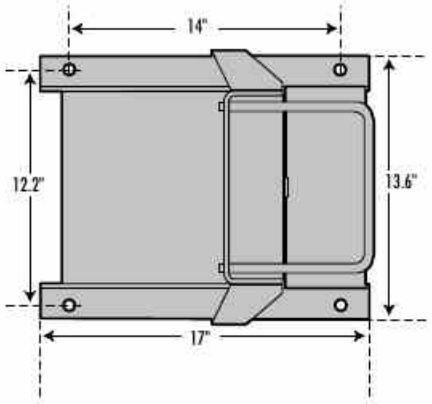

CARTON INVENTORY

- Operator
- Operator arm assembly
- Transformer
- Documentation Packet
- Battery 12 Vdc 7AH (1)
- Keys (2)

HARDWARE INVENTORY

- Warning Signs (2)
- Warranty Card

INSTALLATION » SITE PREPARATION + TYPES OF INSTALLATIONS

SITE PREPARATION

BEFORE *installing the operator, be sure to check the following:*

- Gate is constructed and installed according to ASTM F2200 standards
- Gate fits specifications of operator
- National and local building codes
- Earth ground rod
- UL approved conduit for low and high voltage
- Mounting considerations post or pad
- Operator placement

SAFETY CONSIDERATIONS:

- Warning signs
- Entrapment devices such as loops, contact sensors and non-contact sensors

TYPES OF INSTALLATIONS

IMPORTANT: *There are many factors to consider when installing this gate operator, such as gate size and site layout. The following instructions and illustrations should be used as a general guide so please note that your installation may be different.*

STANDARD INSTALLATION

The illustration is an example of a standard installation.

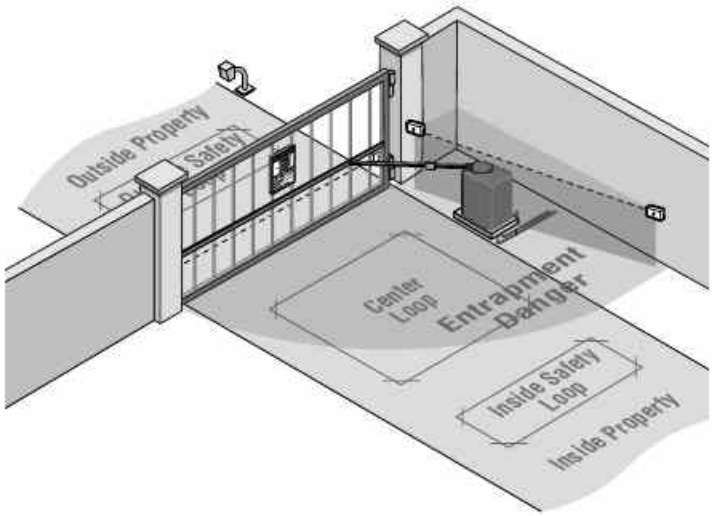

COMPACT INSTALLATION

The illustration is an example of a compact installation. If the operator arm will hit an obstruction when the gate is in the open position follow the directions for Compact Installation (pages 12-14).

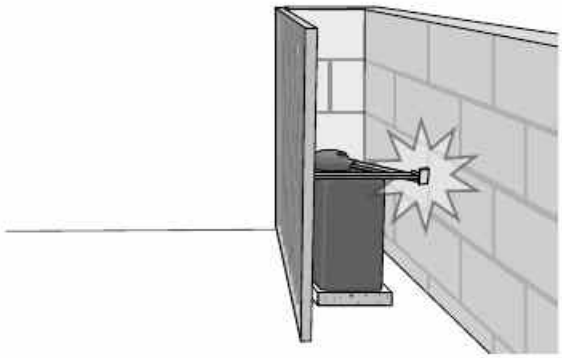

CONCRETE PAD AND OPERATOR ATTACHMENT

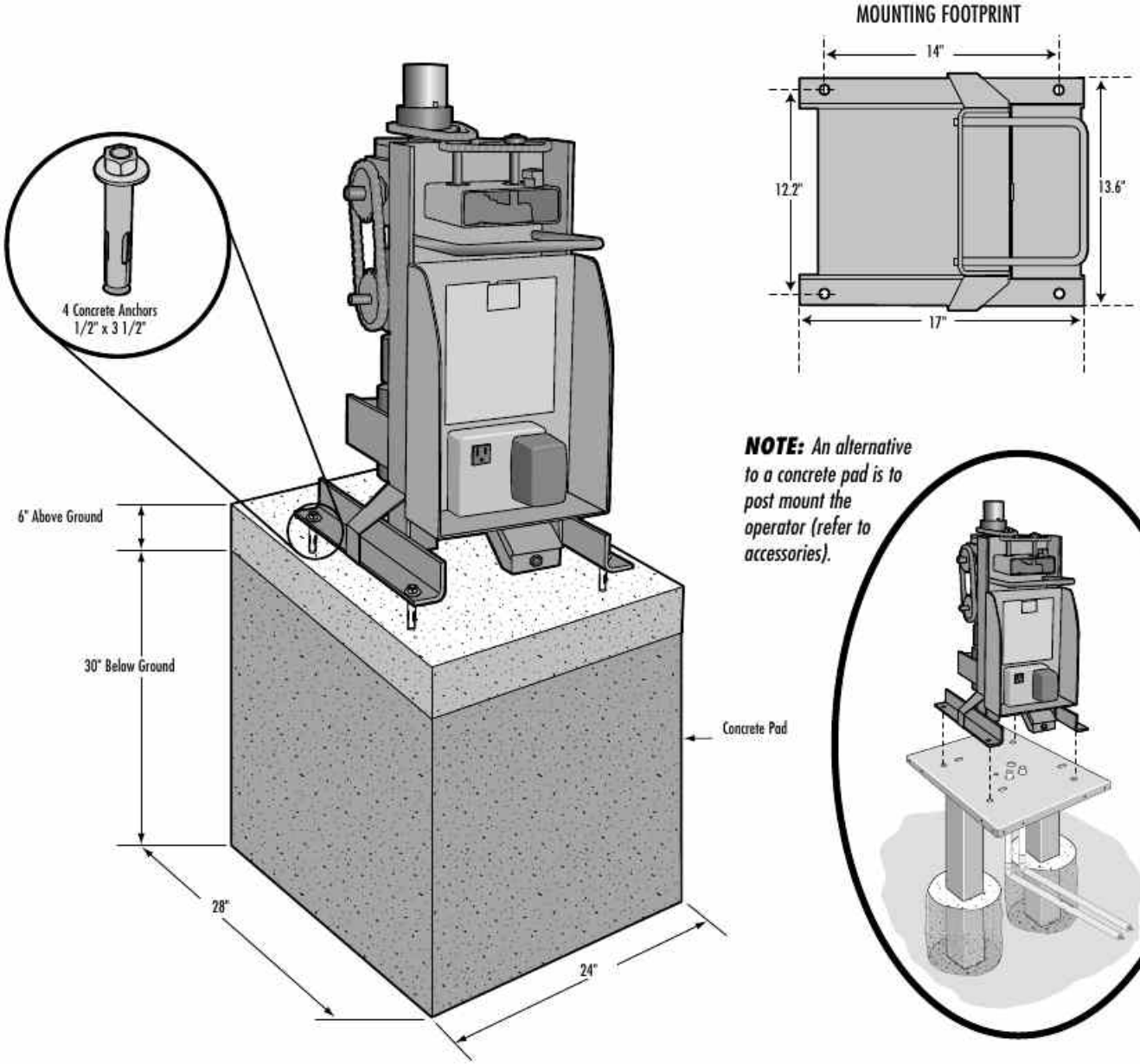

SAMPLE STANDARD INSTALLATION

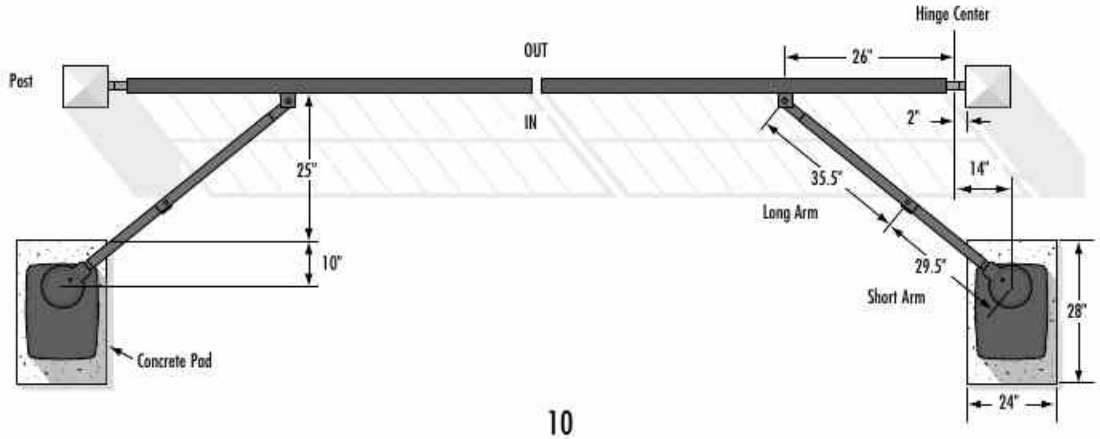

INSTALLATION » STANDARD INSTALLATION

POSITION THE GATE BRACKET

SAMPLE STANDARD INSTALLATION IS SHOWN ON PREVIOUS PAGE.

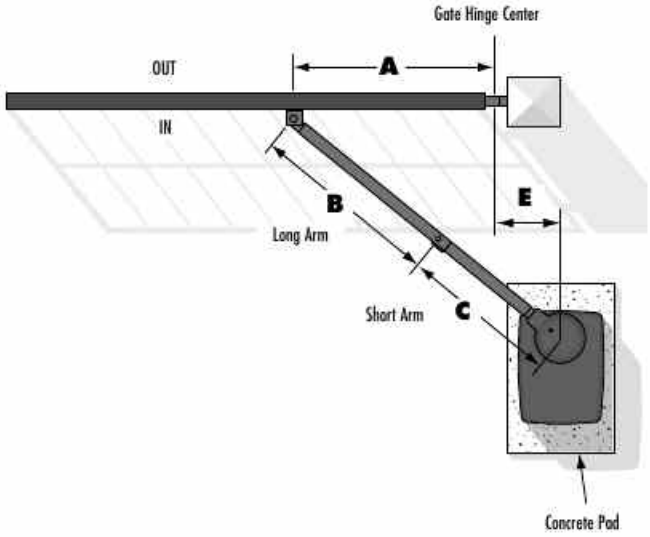

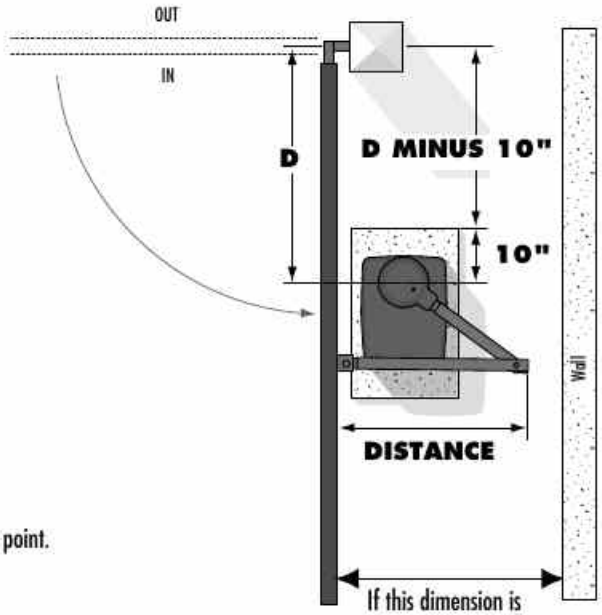

If this dimension is between 20 and 32 inches, a compact installation is necessary. Refer to following page.

Dimension (**A**) thru (**E**) are from the center of one pivot point to the center of another pivot point.

Caution: If the gate is longer than 18 feet, follow **CHART A: A-2**.

Suggestion: The dimensions between the gate and the concrete pad is always 10 inches less than the dimension D.

Example: D = 42", if the dimensions between the gate and the concrete pad is 32".

CHART A

	A	B	C	D	E	DISTANCE
1	46"	35.5"	29.5"	35"	11"	45"
2	46.75"	35.5"	33.5"	42"	11"	37"
3	46.75"	37"	31.5"	40"	11"	41"
4	47.25"	37.25"	30"	37"	11"	45"
5	47"	35"	29.5"	32"	11"	45"
6	42.5"	33"	26.5"	28.5"	11"	41"

CHART B

	A	B	C	D	E	DISTANCE
1	34.5"	34.75"	29.5"	35"	14"	43"
2	44"	36.5"	32.5"	42"	14"	32"
3	44"	37"	30.5"	40"	14"	40"
4	45"	37"	30.5"	37"	14"	43"
5	44.75"	35.75"	29.5"	32"	14"	44"
6	41"	39"	27.5"	28.5"	14"	41"

PROCEED TO PAGE 14.

DETERMINE LOCATION FOR CONCRETE PAD AND OPERATOR

DO NOT run the operator until instructed.

Refer to the illustration to determine the measurements and location of the concrete pad.

NOTE: *When lifting the operator use the handle to avoid damaging the operator.*

TOP VIEW OF OPERATOR AND GATE

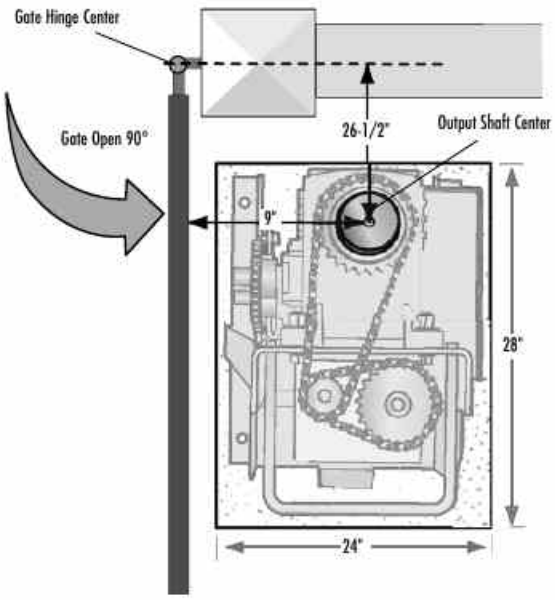

CONCRETE PAD AND OPERATOR ATTACHMENT

Check the national and local building codes before installation.

1. Install the electrical conduit.
2. Pour a concrete pad (reinforced concrete is recommended). The concrete pad should be 6 inches above the ground and deeper than the frost line.
3. Secure the operator to the concrete pad with appropriate fasteners.

NOTE: *An alternative to a concrete pad is to post mount the operator (refer to accessories).*

MOUNTING FOOTPRINT

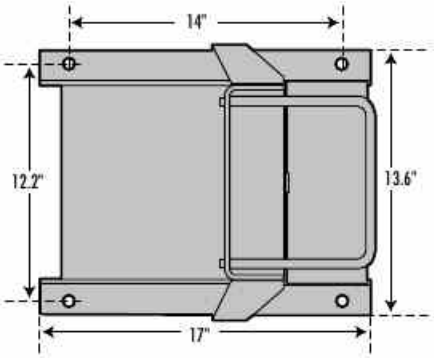

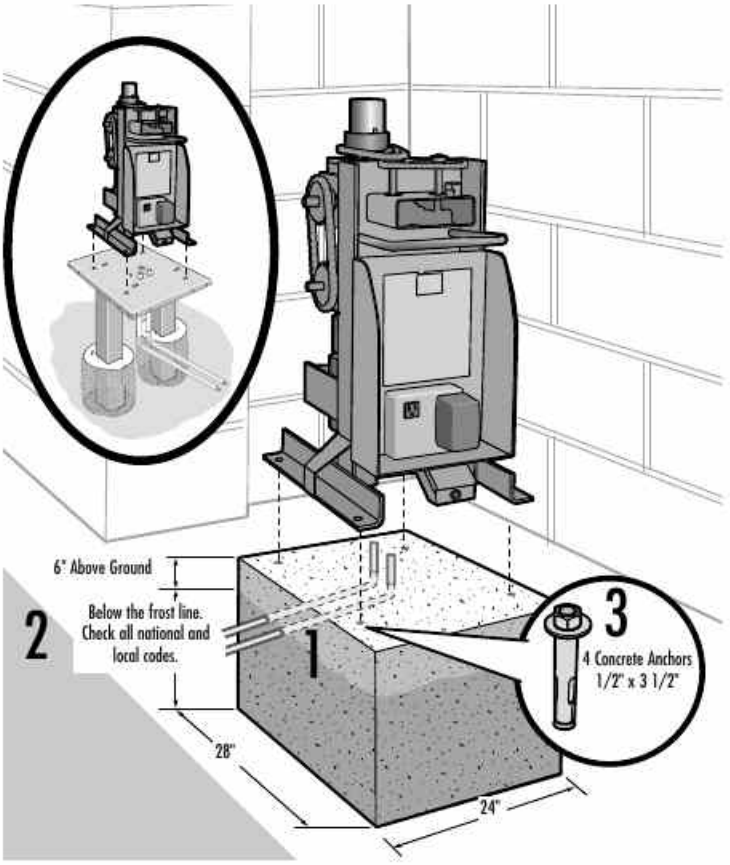

SHORTEN THE OPERATOR ARM

For a compact installation the operator arm will have to be shortened.

1. Take the operator arm apart and remove the inner sleeves from the outer tubing.
2. Cut the outer tubing of the operator arm to the lengths shown.
3. Put the arm back together and adjust the arm to the measurements as shown.

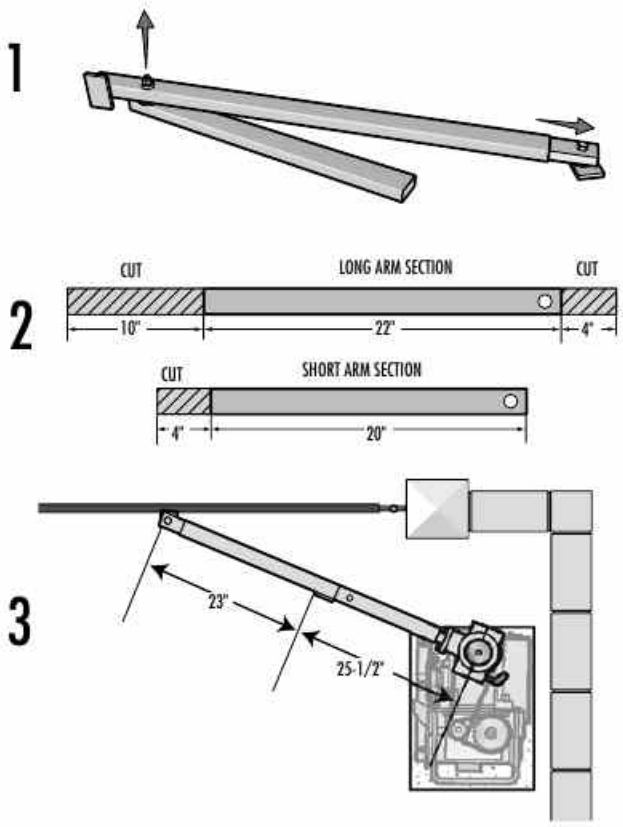

POSITION THE GATE BRACKET

NOTE: *It may be necessary to attach horizontal reinforcement to the gate before attaching the gate bracket.*

1. Measure 33 inches from the gate hinge center.
2. Make sure the operator arm is level and tack weld the gate bracket in this position.

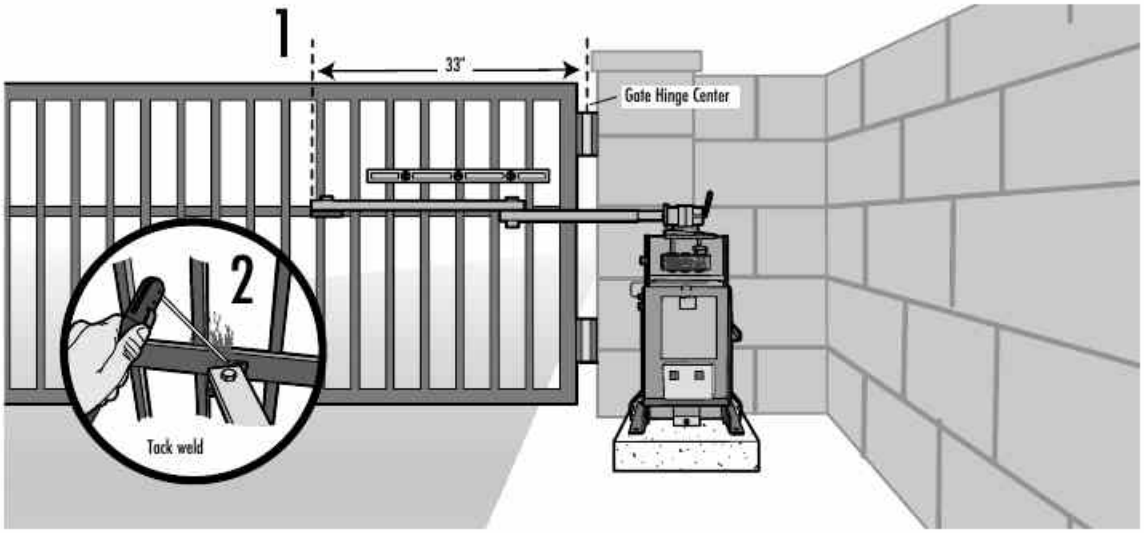

INSTALLATION » STANDARD INSTALLATION + COMPACT INSTALLATION

WELD THE OPERATOR ARM

Once the operator arm measurements are verified:

1. Weld the gate bracket to the gate.
2. Weld the short arm section.
3. Weld the long arm section.

NOTE: *Completely weld around the outer tubing and bracket.*

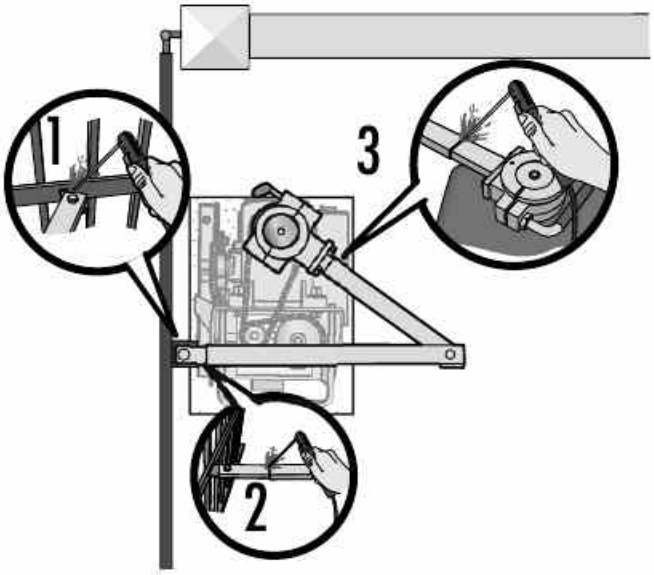

SECURE THE OPERATOR ARM TO THE OUTPUT SHAFT

1. Position the operator arm onto the output shaft so that the pin slides into the slot.
2. Adjust the nuts on the operator arm so the operator arm fits snug on the output shaft yet still allows enough room to swivel (the handle must be in a 90° position).
3. Tighten the handle by pushing it down. Test to make sure the operator arm does not slip on the output shaft.

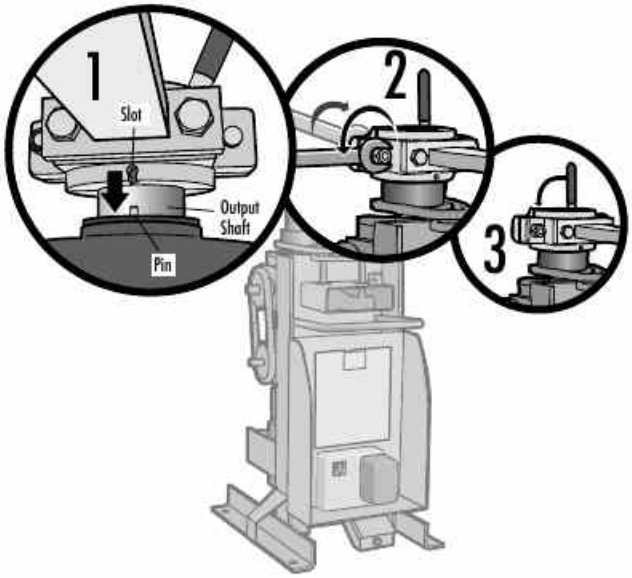

WIRING » EARTH GROUND ROD

EARTH GROUND ROD

Proper grounding gives an electrical charge, such as from an electrical static discharge or a near lightning strike, a path from which to dissipate its energy safely into the earth. Without this path, the intense energy generated by lightning could be directed towards the gate operator. Although nothing can absorb the tremendous power of a direct lightning strike, proper grounding can protect the gate operator in most cases.

Use the proper earth ground rod for your local area. The ground wire must be a single, whole piece of wire. Never splice two wires for the ground wire. If you should cut the ground wire too short, break it, or destroy its integrity, replace it with a single wire length. ***NOTE:*** *If the operator is not grounded properly the range of the remote controls will be reduced.*

1. Install the earth ground rod within 3 feet of the operator.
2. Attach the ground wire to the ground terminal on the control board.

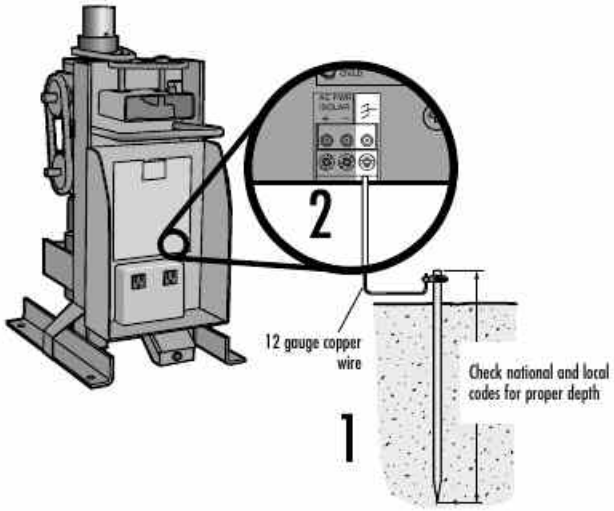

POWER WIRING

This operator can be powered by the internal receptacle, an external receptacle or a solar panel (not provided).

INTERNAL RECEPTACLE

120 VAC POWER WIRE (STRANDED COPPER WIRE)	
Wire Gauge 16 - 100 feet (30 m)	Wire Gauge 10 - 1000 feet (305 m)

NOTE: *All power wiring should be on a dedicated circuit, calculated using NEC guidelines. National and local codes and conditions must be reviewed for suitability of wire installation.*

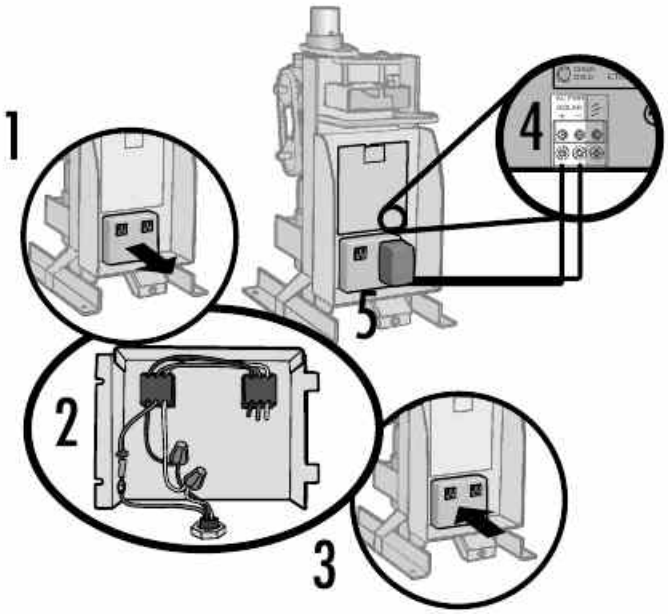

1. Remove the access panel.
2. Connect AC power to the operator:
   - Connect the green wire to the ground screw in the access panel.
   - Connect the black and white wires together with wire nuts.

HEATER WIRING:

NOTE: *If your operator comes with a heater it will have to be wired. The heater may be wired to the internal receptacle or a separate junction box.*

If wiring the heater to the internal receptacle, thread the heater wires through the same knockout as the power wires. Connect the heater wires to the power wires with wire nuts (green to green, black to black, and white to white).

3. Replace the access panel.
4. Connect the wires from the transformer to the AC PWR/SOLAR terminal located on the control board.
5. Plug the transformer into the internal receptacle.

EXTERNAL RECEPTACLE

POWER WIRE (STRANDED COPPER WIRE)	
500 feet or less	500 feet to 1000 feet
Wire Gauge 14 - 500 feet (152 m)	Wire Gauge 12 - 1000 feet (305 m)
Transformer 13.5 Vac	Transformer 14.5 Vac

NOTE: *All power wiring should be on a dedicated circuit, calculated using NEC guidelines. National and local electrical codes must be reviewed for suitability of wire installation. The transformer must be located in a dry location that is protected from weather conditions, such as inside the house or garage.*

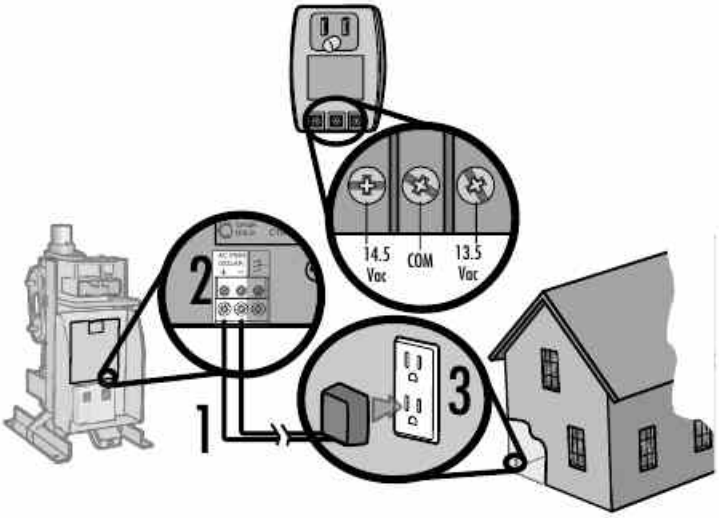

1. Run low voltage wire between the transformer and the operator.
2. Connect the wires from the transformer to the AC PWR/SOLAR terminal located on the control board.
3. Plug the transformer into the external receptacle.

WIRING » POWER WIRING + CONNECT BATTERIES

POWER WIRING

SOLAR PANEL (NOT PROVIDED. SEE ACCESSORIES.)

The solar panel(s) must be located in an open area clear of obstructions and shading for the entire day. The gate operator is not supported in northern climates where temperatures reach below -4˚F. This is due to cold weather and a reduced number of hours of sunlight during the winter months. Cycle rate may vary from solar chart for areas that reach below 32˚F. Solar panels should be cleaned on a regular basis for best performance to ensure proper operation. For solar applications, a minimum of 20W solar panels and two 7AH batteries are recommended. For Zone 3 cold weather sites, one 33AH battery is recommended. We recommend LiftMaster low power draw accessories to minimize power draw, refer to accessory page.



NUMBER OF CYCLES PER DAY

Single Gate Installations (16 ft. 400 lb. gate)

	Accessories				Zone 1 (6 Hrs sunlight/day)		Zone 2 (4 Hrs Sunlight/day)		Zone 3 (2 Hrs Sunlight/day)
	Solenoid Lock	50 mA	100 mA	300 mA	2 7AH Batteries (optional)	1 33AH Battery (optional)	2 7AH Batteries (optional)	1 33AH Battery (optional)	1 33AH Battery (optional)
20W SOLAR PANEL					50	50	38	43	20
	✔				48	50	32	36	17
		✔			50	50	30	35	12
			✔		41	49	21	26	3
				✔	1	9	0	0	0
30W SOLAR PANEL					50	50	50	50	31
	✔				50	50	48	50	26
		✔			50	50	50	50	24
			✔		50	50	41	49	15
				✔	30	43	1	9	0

Dual Gate Installations (16 ft. 400 lb. gate)

	Accessories				Zone 1 (6 Hrs sunlight/day)		Zone 2 (4 Hrs Sunlight/day)		Zone 3 (2 Hrs Sunlight/day)
	Solenoid Lock	50 mA	100 mA	300 mA	2 7AH Batteries (optional)	1 33AH Battery (optional)	2 7AH Batteries (optional)	1 33AH Battery (optional)	1 33AH Battery (optional)
20W SOLAR PANEL					25	29	17	19	9
	✔				23	27	15	17	8
		✔			22	26	13	15	5
			✔		18	22	9	12	1
				✔	0	4	0	0	0
30W SOLAR PANEL					39	45	25	29	14
	✔				35	41	23	27	13
		✔			35	41	22	26	10
			✔		31	37	18	22	6
				✔	13	19	0	4	0

CONNECT BATTERIES

The batteries are charged in the circuit by using the transformer (provided) or an optional solar panel. Batteries will degrade over time depending on temperature and usage. For best performance, the batteries should be replaced every 3 years. Batteries do not perform well in extremely cold temperatures. The operator comes with one 7AH battery. A second 7AH (29-NP712) battery may be added or one 33AH (A12330SGLPK) may be used in place of the 7AH batteries.

Always disconnect the batteries BEFORE servicing the operator.

NOTE: *Setting the battery on concrete will not have a negative affect on the charging or battery life.*

If the installation is a dual gate, proceed to next page.

1 Locate the battery plug.

2 Connect the battery plug to either connector on the control board.

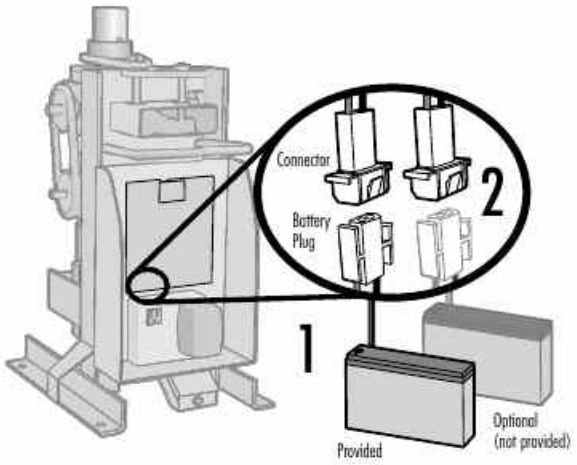

NUMBER OF CYCLES FOR BATTERY BACKUP

	Accessories				Single Gate (16 ft. 400 lb. gate)		
	Solenoid Lock	50 mA	100 mA	300 mA	1 7AH Battery (standard)	2 7AH Batteries (optional)	1 33AH Battery (optional)
BATTERY BACKUP (BBU)					40	100	275
	✔				36	83	228
		✔			43	98	269
			✔		42	97	267
				✔	41	94	258

	Accessories				Dual Gate (16 ft. 400 lb. gate)		
	Solenoid Lock	50 mA	100 mA	300 mA	1 7AH Battery (standard)	2 7AH Batteries (optional)	1 33AH Battery (optional)
BATTERY BACKUP (BBU)					19	44	121
	✔				17	40	111
		✔			19	44	121
			✔		19	43	120
				✔	19	43	118

PRIMARY/SECONDARY OPERATORS

NOTE: *Use the Dual Gate Wiring Kit. Refer to the accessory page for more information.*

Before digging, contact local underground utility locating companies. Choose one operator to be the primary and the other operator to be the secondary.

NOTES:

- *The gate with the longer travel span must be set as the primary operator (GATE 1).*
- *If one gate is overlapping the other (an ornamental overhang, maglock or solenoid lock) consider which gate needs to open/close first and plan accordingly. The gate that opens first MUST be the primary operator (GATE 1).*

The control board in the secondary operator is not used.

1. Trench across driveway to bury the extension cable.
2. Disconnect the terminal block connector (with the attached label) from the end of the extension cable. Thread the extension cable through the bottom of the primary operator (using the watertight connectors) and reconnect the extension cable wires to the terminal block connector.
3. Connect the terminal block (with the attached label) to the GATE 2 connector of the primary operator's control board.
4. Disconnect the terminal block connector from the other end of the extension cable. Thread the extension cable through the bottom of the secondary operator (using the watertight connectors) and reconnect the wires to the terminal block connector.
5. Disconnect the wires from the GATE 1 connector on the secondary operator and connect them to the terminal block connector.
6. Move the battery from the secondary operator to the primary operator. Connect the plugs from the batteries to the connectors on the control board.
7. If one gate overlaps the other, set the LOCK/BIPART DELAY switch to the ON position on the primary control board. Factory default setting is OFF.

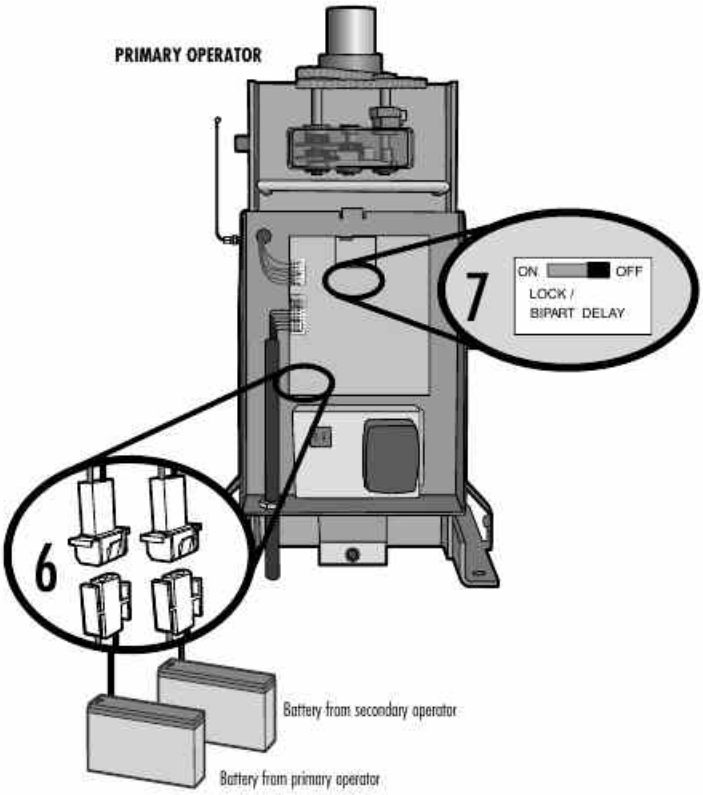

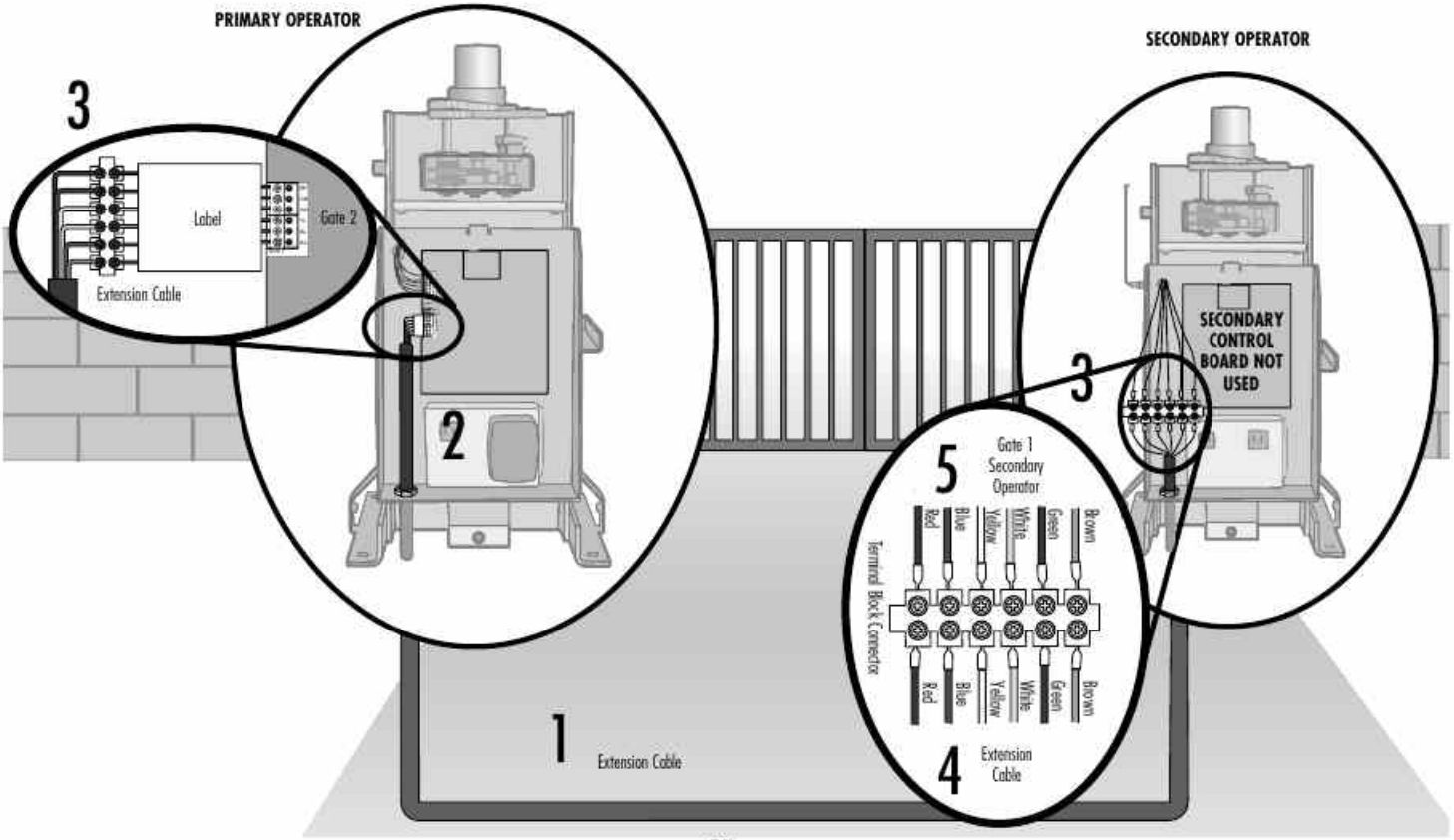

⚠ WARNING

To reduce the risk of SEVERE INJURY or DEATH:

- Without a properly installed safety reversal system, persons (particularly small children) could be SERIOUSLY INJURED or KILLED by a moving gate.
- Too much force on gate will interfere with proper operation of safety reversal system.
- NEVER increase force beyond minimum amount required to close gate.
- NEVER use force adjustments to compensate for a binding or sticking gate.
- If one control (force or travel limits) is adjusted, the other control may also need adjustment.
- After ANY adjustments are made, the safety reversal system MUST be tested. Gate MUST reverse on contact with a rigid object.

LEARN LIMIT INTRODUCTION

The limits are internal settings that indicate when the gate is in the fully open position and the fully closed position. For proper functionality, the limits must be programmed during the installation process.

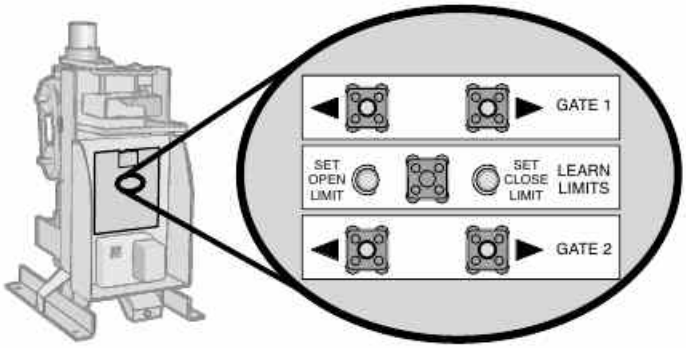

The programming uses a combination of buttons on the control board. The specific buttons used for programming depends on which side of the gate the primary operator is installed and how many operators the installation includes.

BEFORE BEGINNING:

1. Make sure the operator arm is properly seated on the output shaft (the pin must fit into the slot).
2. Make sure the handle is released on the operator arm and the gate is closed.
3. Make sure the learn limit cam is touching the learn limit switch.

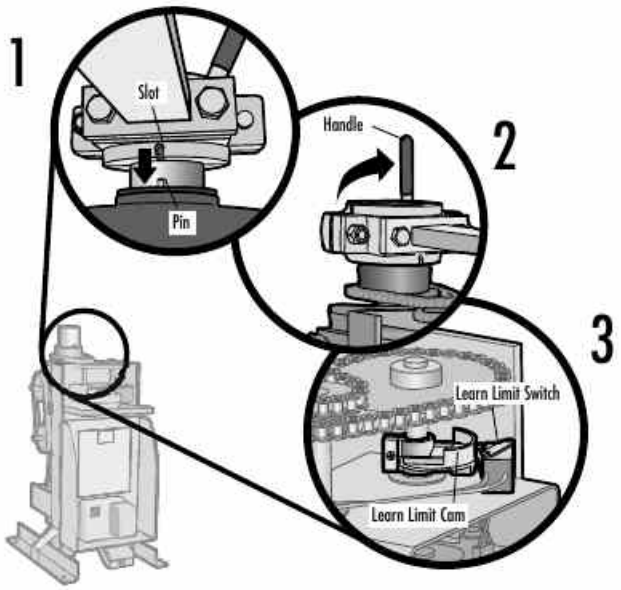

If a mistake is made during programming:

1. Press the RESET button on the operator to start over.

The programming times-out automatically after 60 seconds of inactivity.

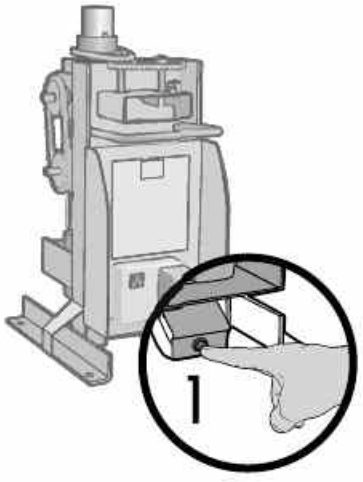

ADJUSTMENT » LEARN LIMITS

SINGLE GATE LEFT-HAND SIDE

1. Close the gate. Make sure the operator arm is properly seated on the output shaft (the pin must fit into the slot). Make sure the handle is released on the operator arm and the learn limit cam is touching the learn limit switch.

PROGRAM OPEN

2. Manually open the gate to the desired open position.
3. Tighten the handle on the operator arm.
4. Press and release the LEARN LIMITS BUTTON. The SET OPEN LIMIT LED will blink.
5. Press and release the LEARN LIMITS button again. The control board will beep and the SET CLOSE LIMITS LED will blink.

PROGRAM CLOSE

6. Press and hold the GATE 1 left button to move the gate to the desired CLOSED position. When the gate is in the desired position, release the button.
   NOTE: *The GATE 1 right and left buttons can be used to jog the gate back and forth as needed.*
7. When gate is in the desired CLOSED position, press and release the LEARN LIMITS button. The control board will beep and the SET CLOSE LIMITS LED will stop blinking.

Programming is now complete. If the SET OPEN LIMIT LED continues to blink, repeat programming. If the problem continues, see below.

Test the limits by pressing the SINGLE BUTTON to open and close the gate.

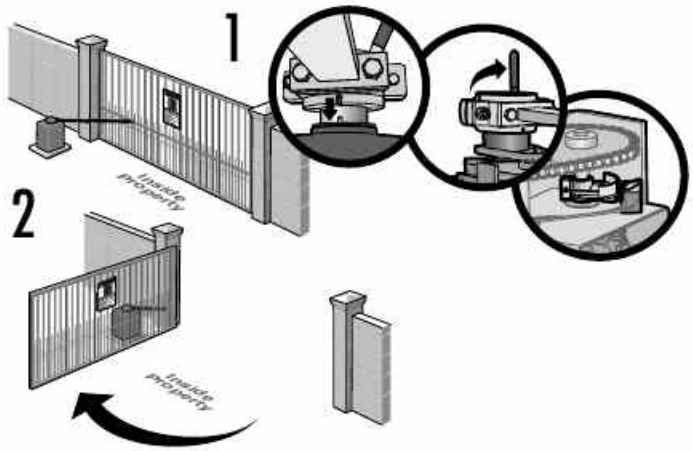

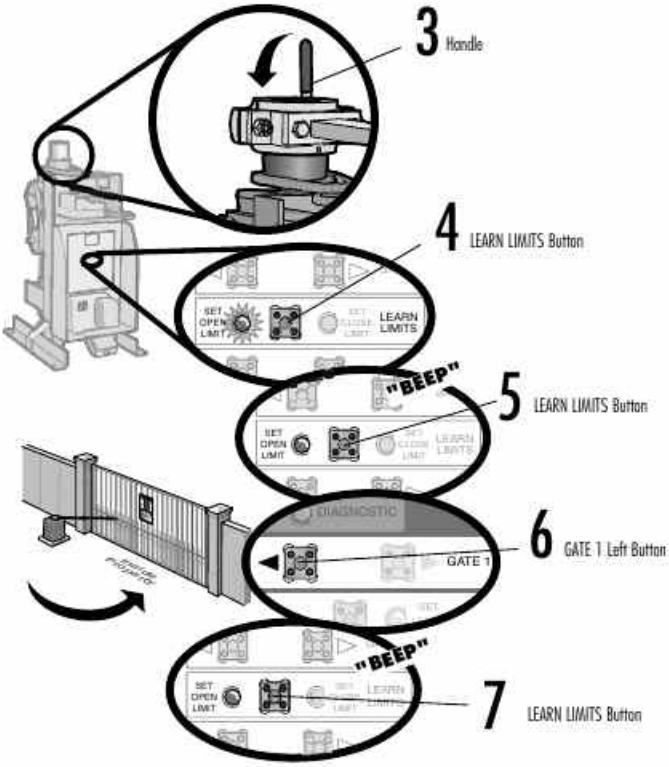

IF THE LIMITS WILL NOT PROGRAM

1. Disconnect the operator by releasing the handle on the operator arm.
2. Manually close the gate.
3. Loosen the screw on the learn limit cam and rotate the learn limit cam so it is touching the learn limit switch. Tighten the screw.
4. Tighten the handle on the operator arm.

Program the limits again.

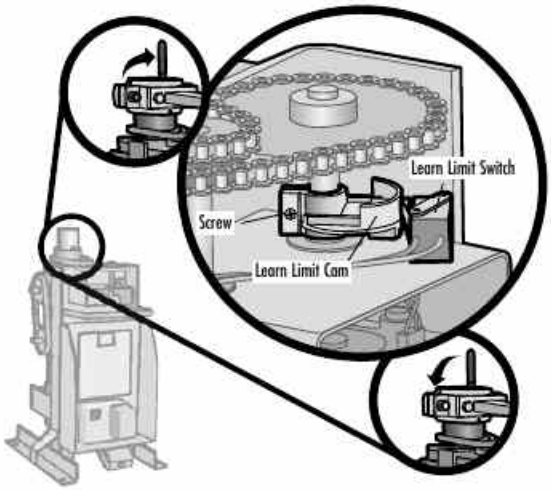

ADJUSTMENT » LEARN LIMITS

SINGLE GATE RIGHT-HAND SIDE

1. Close the gate. Make sure the operator arm is properly seated on the output shaft (the pin must fit into the slot). Make sure the handle is released on the operator arm and the learn limit cam is touching the learn limit switch.

PROGRAM OPEN

2. Manually open the gate to the desired open position.
3. Tighten the handle on the operator arm.
4. Press and release the LEARN LIMITS BUTTON. The SET OPEN LIMIT LED will blink.
5. Press and release the LEARN LIMITS button again. The control board will beep and the SET CLOSE LIMITS LED will blink.

PROGRAM CLOSE

6. Press and hold the GATE 1 right button to move the gate to the desired CLOSED position. When the gate is in the desired position, release the button.
   NOTE: *The GATE 1 right and left buttons can be used to jog the gate back and forth as needed.*
7. When gate is in the desired CLOSED position, press and release the LEARN LIMITS button. The control board will beep and the SET CLOSE LIMITS LED will stop blinking.

Programming is now complete. If the SET OPEN LIMIT LED continues to blink, repeat programming. If the problem continues, see below.

Test the limits by pressing the SINGLE BUTTON to open and close the gate.

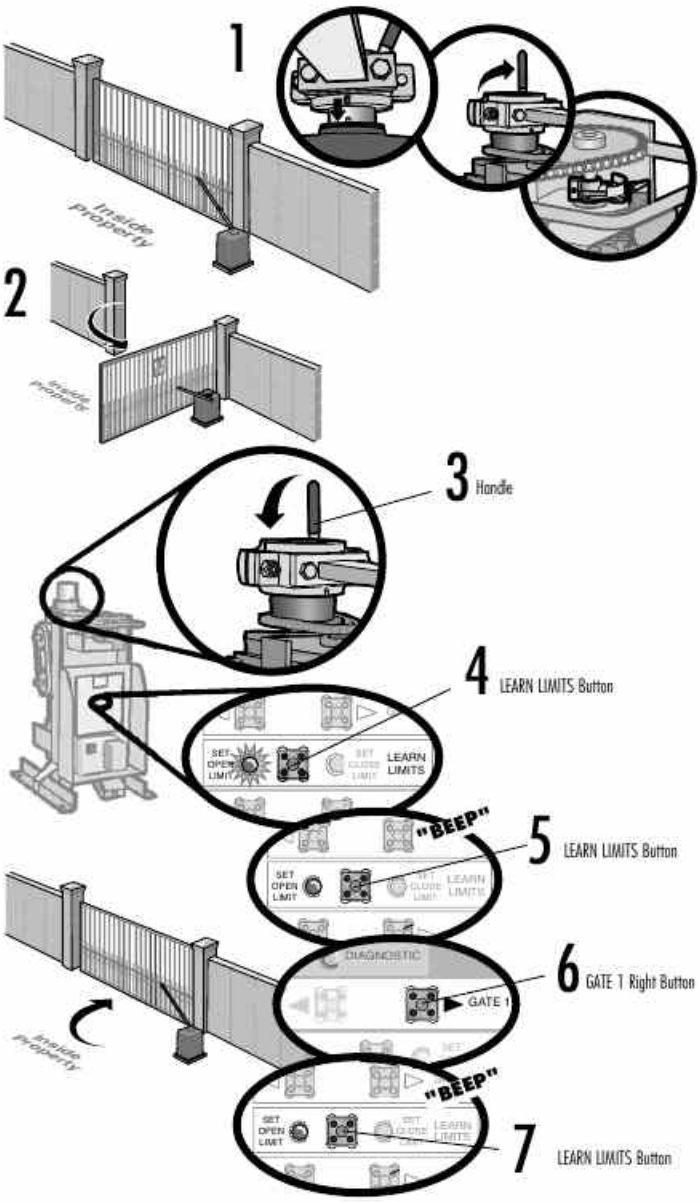

IF THE LIMITS WILL NOT PROGRAM

1. Disconnect the operator by releasing the handle on the operator arm.
2. Manually close the gate.
3. Loosen the screw on the learn limit cam and rotate the learn limit cam so it is touching the learn limit switch. Tighten the screw.
4. Tighten the handle on the operator arm.

Program the limits again.

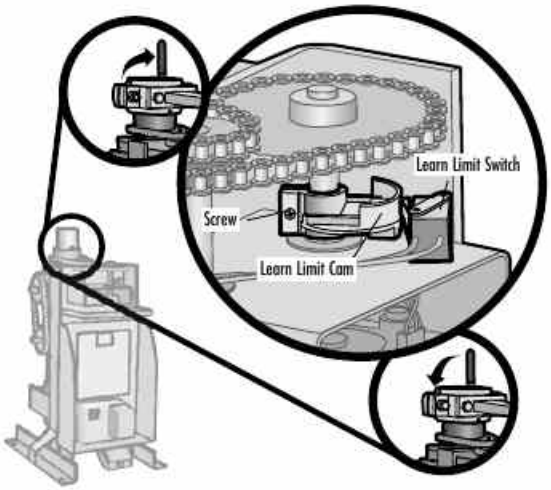

ADJUSTMENT » LEARN LIMITS

DUAL GATE (LEFT-SIDE PRIMARY OPERATOR)

1. Close the gates. Make sure the operator arm is properly seated on the output shaft (the pin must fit into the slot) of both operators and the learn limit cam is touching the learn limit switch on both operators. Make sure the handle is released on the operator arm of the PRIMARY operator ONLY.

PROGRAM OPEN

2. Manually open the primary gate.
3. Tighten the handle on the primary operator.
4. Press and release the LEARN LIMITS button. The SET OPEN LIMIT LED will blink.
5. Press and hold the GATE 2 right button to move the right operator to the desired OPEN position. When the gate is in the desired position, release the button.
   NOTE: *The GATE 2 right and left buttons can be used to jog the gate back and forth as needed.*
6. Press and release the LEARN LIMITS button. The control board will beep and the SET CLOSE LIMITS LED will blink.

PROGRAM CLOSE

7. Press and hold the GATE 2 left button to move the right operator to the desired CLOSED position. When the gate is in the desired position, release the button.
   NOTE: *The GATE 2 right and left buttons can be used to jog the gate back and forth as needed.*
8. Press and hold the GATE 1 left button to move the left operator to the desired CLOSED position. When the gate is in the desired position, release the button.
   NOTE: *The GATE 1 right and left buttons can be used to jog the gate back and forth as needed.*
9. Press and release the LEARN LIMITS button. The control board will beep and the SET CLOSE LIMITS LED will stop blinking.

Programming is now complete. If the SET OPEN LIMIT LED continues to blink, repeat programming. If the problem continues, see below.

Test the limits by pressing the SINGLE BUTTON to open and close the gate.

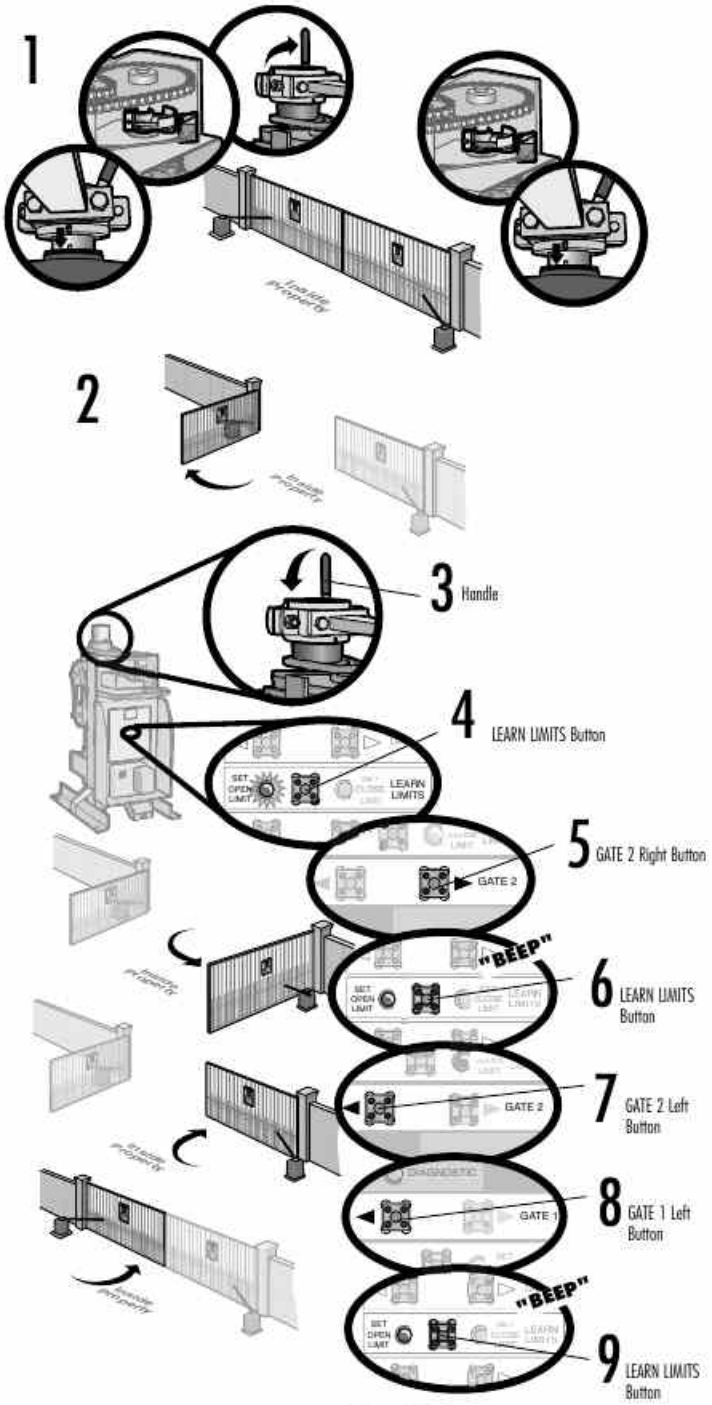

IF THE LIMITS WILL NOT PROGRAM

1. Disconnect the operator by releasing the handle on the operator arm.
2. Manually close the gate.
3. Loosen the screw on the learn limit cam and rotate the learn limit cam so it is touching the learn limit switch. Tighten the screw.
4. Tighten the handle on the operator arm.

Repeat for second operator. Program the limits again.

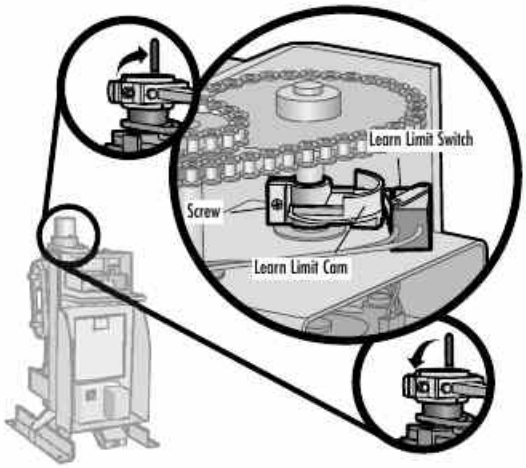

ADJUSTMENT » LEARN LIMITS

DUAL GATE (RIGHT-SIDE PRIMARY OPERATOR)

1. Close the gates. Make sure the operator arm is properly seated on the output shaft (the pin must fit into the slot) of both operators and the learn limit cam is touching the learn limit switch on both operators. Make sure the handle is released on the operator arm of the PRIMARY operator ONLY.

PROGRAM OPEN

2. Manually open the primary gate.
3. Tighten the handle on the primary operator.
4. Press and release the LEARN LIMITS button. The SET OPEN LIMIT LED will blink.
5. Press and hold the GATE 2 left button to move the left operator to the desired OPEN position. When the gate is in the desired position, release the button.
   NOTE: *The GATE 2 right and left buttons can be used to jog the gate back and forth as needed.*
6. Press and release the LEARN LIMITS button. The control board will beep and the SET CLOSE LIMITS LED will blink.

PROGRAM CLOSE

7. Press and hold the GATE 2 right button to move the left operator to the desired CLOSED position. When the gate is in the desired position, release the button.
   NOTE: *The GATE 2 right and left buttons can be used to jog the gate back and forth as needed.*
8. Press and hold the GATE 1 right button to move the right operator to the desired CLOSED position. When the gate is in the desired position, release the button.
   NOTE: *The GATE 1 right and left buttons can be used to jog the gate back and forth as needed.*
9. Press and release the LEARN LIMITS button. The control board will beep and the SET CLOSE LIMITS LED will stop blinking.

Programming is now complete. If the SET OPEN LIMIT LED continues to blink, repeat programming. If the problem continues, see below.

Test the limits by pressing the SINGLE BUTTON to open and close the gate.

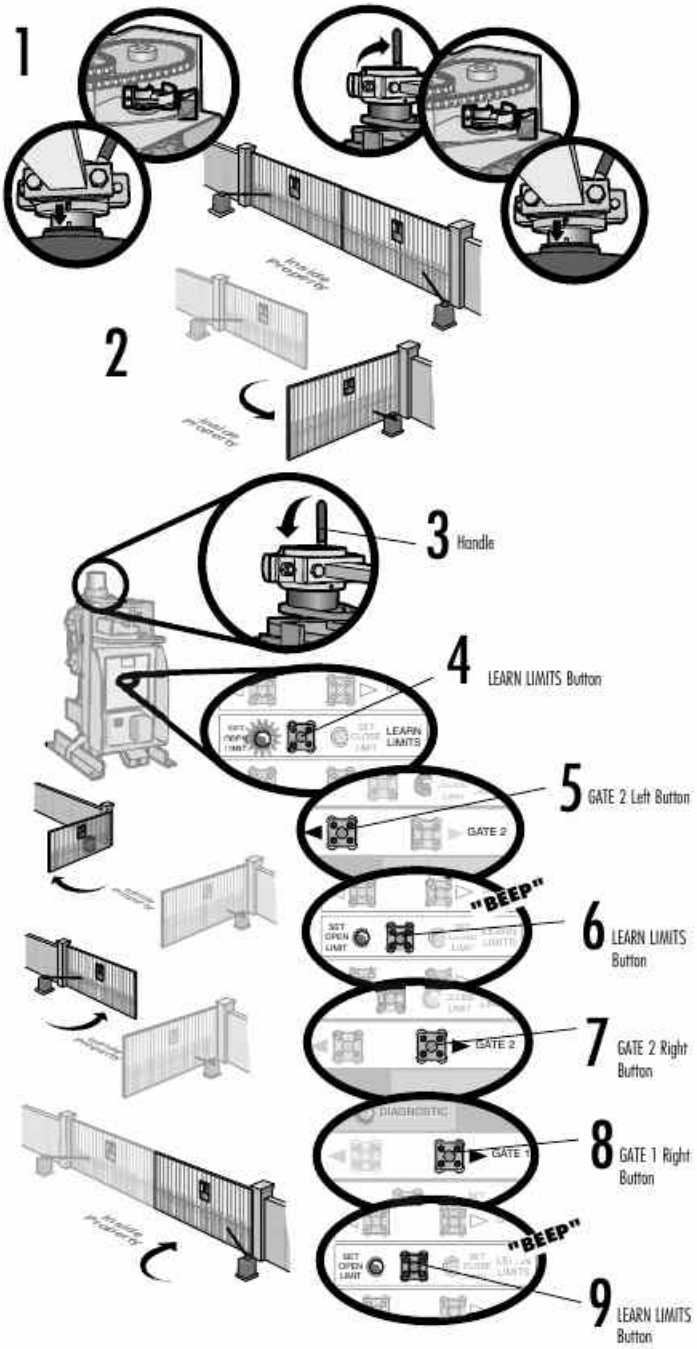

IF THE LIMITS WILL NOT PROGRAM

1. Disconnect the operator by releasing the handle on the operator arm.
2. Manually close the gate.
3. Loosen the screw on the learn limit cam and rotate the learn limit cam so it is touching the learn limit switch. Tighten the screw.
4. Tighten the handle on the operator arm.

Repeat for second operator. Program the limits again.

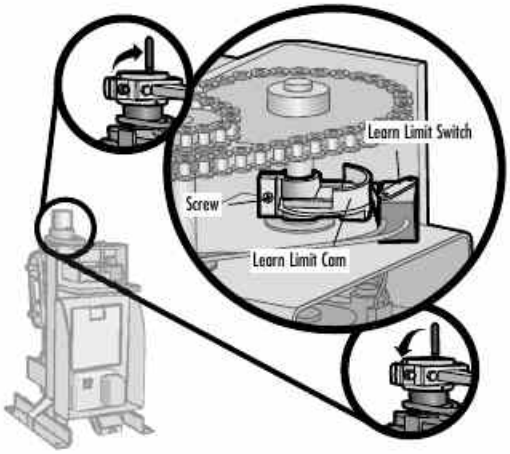

ADJUSTMENT » FORCE ADJUSTMENT + TEST

FORCE ADJUSTMENT

The operator is equipped with an obstruction sensing feature. If the gate encounters an obstruction the operator will automatically reverse direction for a short time and stop. Based on the length and weight of the gate it may be necessary to make force adjustments. The force adjustment should be high enough that the gate will not reverse by itself and not cause nuisance interruptions but low enough to prevent serious injury to a person.

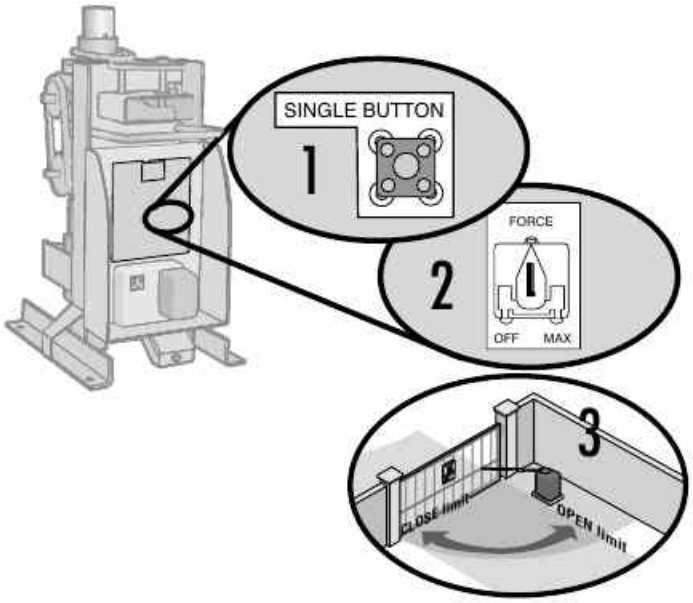

TO ADJUST THE FORCE

1. Use the SINGLE BUTTON to open and close the gate.
2. If the gate stops or reverses before reaching the fully open or closed position increase the force by turning the force control slightly. On dual gate applications the force will require a higher setting because it is affecting two motors instead of one.
3. Run operator through a complete cycle.

NOTE: *Weather conditions can affect the gate movement, so seasonal adjustment may be required. The force control is factory set to the mid-position.*

TEST

After any adjustments are made, test the operator:

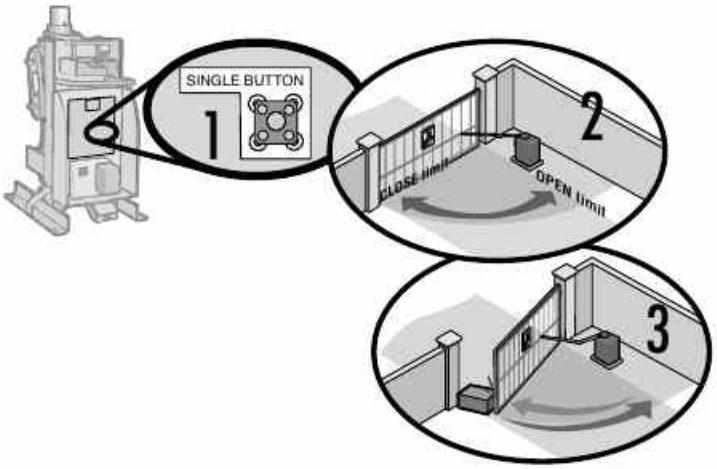

1. Use the SINGLE BUTTON to open and close the gate.
2. Test the limits by making sure the gate is stopping at the OPEN and CLOSE limits.
3. Test the force by making sure the gate will stop and reverse direction for a short time on contact with an obstruction.

The basic installation is complete.

At this point the cover can be put on the operator:

Remove the operator arm from the output shaft by releasing the handle. Place the cover over the operator. Reattach the operator arm to the output shaft (making sure the pin fits into the slot) and secure by pushing the handle down. Place the operator arm cover over the operator arm and secure with star knob.



Entrapment protection devices are required (see Entrapment Protection Devices in the Additional Features section).

PROGRAMMING » REMOTE CONTROLS + KEYLESS ENTRY + ERASE ALL CODES + ALTERNATE RADIO RECEIVER INSTALLATION

A combined total of 50 remote controls and keyless entry PINs can be programmed to the operator. For highest level of security, we recommend the Security✚® line of products. Refer to Accessories.

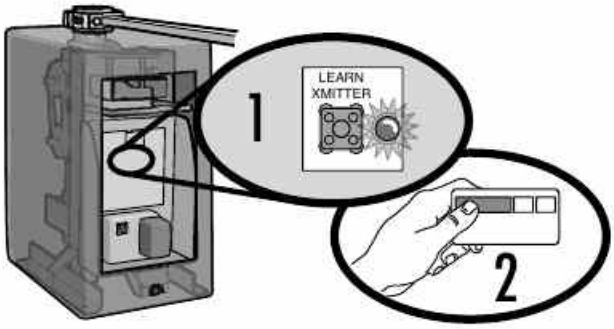

TO ADD OR REPROGRAM A REMOTE CONTROL (NOT PROVIDED)

1. Press and release the LEARN XMITTER button (LED will light).
2. Press the remote control button. The LED will flash and the alarm output will activate twice.

To program additional remote controls, repeat the steps until all the remote controls are programmed.

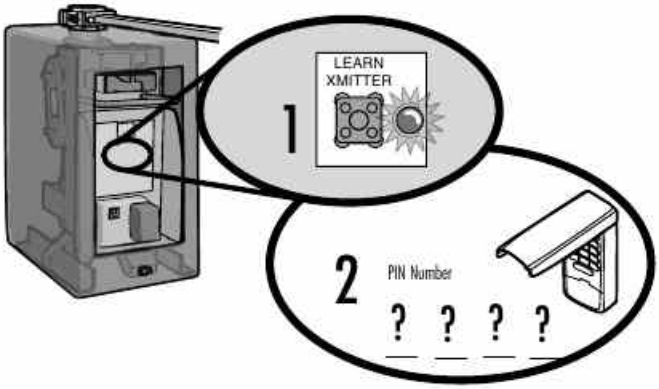

TO ADD, REPROGRAM OR CHANGE A WIRELESS KEYLESS ENTRY PIN (NOT PROVIDED)

1. Press and release the LEARN XMITTER button (LED will light).
2. Enter a 4-digit personal identification number (PIN) of your choice on the keypad.
3. Press the ENTER button on the keypad. The LED will flash and the alarm output will activate twice.

ERASE ALL CODES

1. Press and hold the LEARN XMITTER button on the control board until the learn indicator light goes out (approximately 6 seconds). All previous codes are now erased.

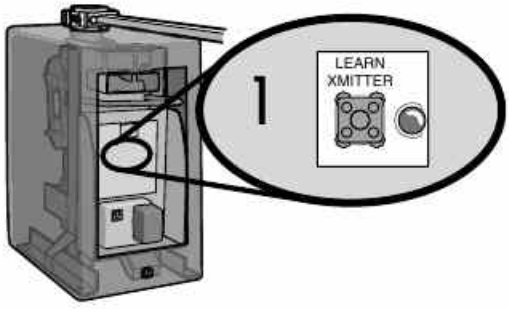

NOTICE: To comply with FCC and or Industry Canada (IC) rules, adjustment or modifications of this receiver and/or transmitter are prohibited, except for changing the code setting or replacing the battery. THERE ARE NO OTHER USER SERVICEABLE PARTS.

Tested to Comply with FCC Standards FOR HOME OR OFFICE USE. Operation is subject to the following two conditions: (1) this device may not cause harmful interference, and (2) this device must accept any interference received, including interference that may cause undesired operation.

ALTERNATE RADIO RECEIVER INSTALLATION

1. The receiver should be connected to the SINGLE BUTTON input and the CTRL PWR input.

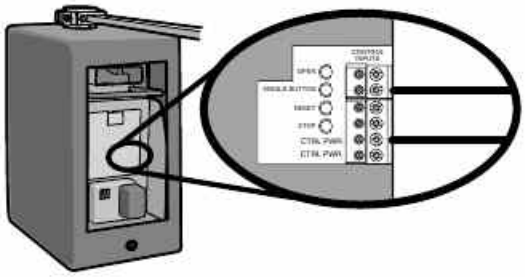

ADDITIONAL FEATURES » TIMER-TO-CLOSE + AUTO OPEN JUMPER + HEATER + PARTY MODE

TIMER-TO-CLOSE (TTC)

The TIMER-TO-CLOSE feature can be set to automatically close the gate after a specified time period. The TTC is factory set to OFF.

If the TTC is set to the OFF position, then the gate will remain open until the operator receives another command from a remote control or the SINGLE BUTTON control.

TO SET THE TIMER-TO-CLOSE

1 Rotate the TIMER-TO-CLOSE dial to the desired setting. The range is 0 to 180 seconds, 0 seconds is OFF.

NOTE: *Any remote control or SINGLE BUTTON command on the control board prior to the TTC expiring will close the gate. The TTC is reset by any signals from the loops, close edges and close photoelectric sensors.*

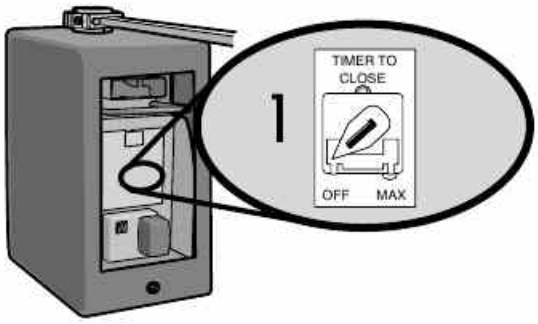

AUTO OPEN JUMPER

The factory default position is OFF. If the AUTO OPEN jumper is moved to the "ON" position, when the operator reaches a low battery voltage threshold (11.5 Vdc) it will automatically open the gate and hold it in the open position. When the operator reaches normal battery voltage (12 Vdc or above) the operator will close the gate when a command is given by either a remote control or the SINGLE BUTTON.

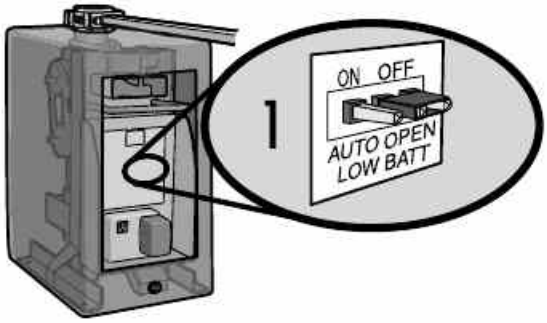

HEATER

The operator may have a heater installed, depending on the model purchased. The heater must be powered by 120 Vac ONLY. If the heater switch is left in the "ON" position, the heater will turn on and off automatically when needed.

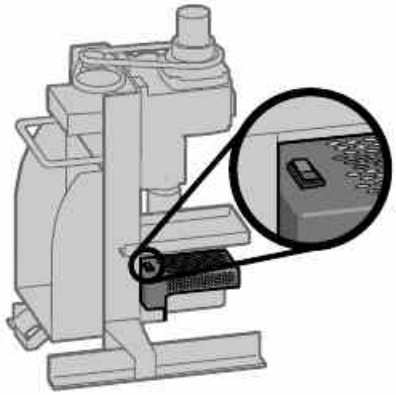

PARTY MODE

If the Timer-to-Close feature is enabled and you would like the gate to remain open, open the gate fully, then press the reset button. The next command given by a LiftMaster remote control or SINGLE BUTTON on the control board will close the gate and return the operator to normal operation.

NOTE: *If an alternative radio receiver is wired to the operator, the receiver must be wired to the SINGLE BUTTON and CTRL PWR inputs. Refer to page 24.*



ADDITIONAL FEATURES » ENTRAPMENT PROTECTION DEVICES

⚠ WARNING

To prevent SERIOUS INJURY or DEATH from a moving gate:

- Entrapment protection devices MUST be installed to protect anyone who may come near a moving gate.
- Locate entrapment protection devices to protect in BOTH the open and close gate cycles.
- Locate entrapment protection devices to protect between moving gate and RIGID objects, such as posts or walls.

CONTACT SENSORS (EDGE SENSOR)

Edge sensor models G65MG0204, G65MG0205, G65MGR205 or G65MGS205 (2-wire, non-monitored).

1. Connect the contact sensor wires to either the CLOSE EDGE or OPEN EDGE/PHOTO terminal on the control board.

- CLOSE EDGE: Will detect an obstruction while the gate is closing.
- OPEN EDGE/PHOTO: Will detect an obstruction while the gate is opening.

If the electrically activated edge sensor comes in contact with an obstruction while the gate is closing/opening, the gate will stop and reverse direction for a short time. The gate will remain in this position until another command is given. If the edge sensor comes in contact with the obstruction a second time, the gate will stop and reverse direction for a short time and the operator alarm will sound. The alarm will sound (up to 5 minutes) and the operator will have to be reset before it will resume normal operation.

NON-CONTACT SENSORS (12 VDC PHOTOELECTRIC SENSORS)

Photoelectric sensor model 50-220.

1. Connect the non-contact sensor wires to either the OPEN PHOTO or CLOSE PHOTO terminal on the control board.

It is best to use failsafe photoelectric sensors. If a photoelectric sensor is not working or loses power or the photo beam is permanently blocked, the photoelectric sensor will stop ALL gate operation.

- CLOSE PHOTO: If the photoelectric sensor beam is broken while the gate is closing, the gate will stop and reverse to the fully open position. The obstruction must be cleared before the operator will resume normal operation.
- OPEN PHOTO: If the photoelectric sensor beam is broken while the gate is opening, the gate will stop and stay in that position until the obstruction is cleared. Once the obstruction is cleared the operator will resume normal operation.

NOTE: *The OPEN EDGE/PHOTO terminal may be used as a secondary input for photoelectric sensors (as in dual gate applications, when more than one OPEN PHOTO is needed).*

Property owners are obligated to test photoelectric sensors monthly.

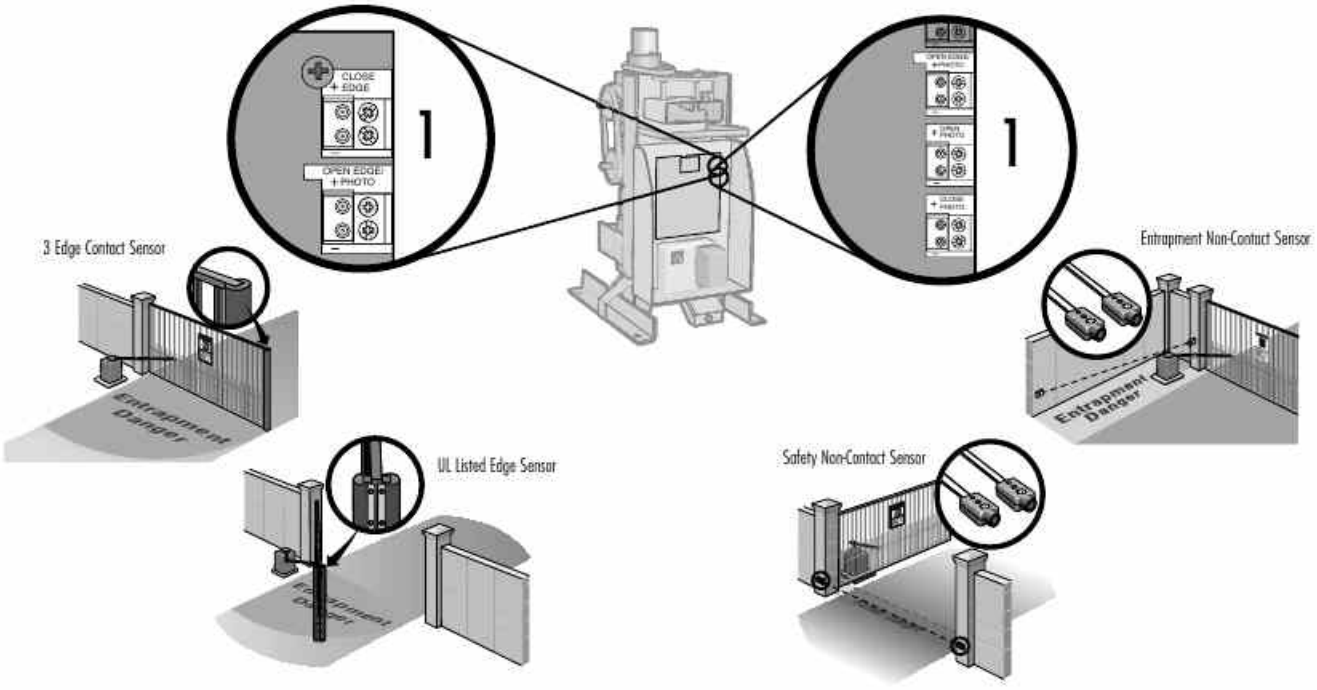

TO REMOVE CHAMBERLAIN PHOTOELECTRIC SENSORS

1. Remove the photoelectric sensor wires from the terminal block.
2. Press the LEARN LIMITS button.
3. Press the reset button.

OPERATION AND MAINTENANCE » MANUAL DISCONNECT + RESET BUTTON + REMOTE CONTROL + SLEEP MODE

MANUAL DISCONNECT

Release the handle on the operator arm to allow the gate to be opened and closed manually. On a dual gate application the handle must be released on both operators. To resume normal function tighten the handle by pushing it down.



RESET BUTTON

The reset button is located on the front of the operator and serves several functions.

Pressing the reset button will stop a moving gate during a normal open/close cycle, like a stop button. The operator does not need to be reset after doing this.



PROGRAMMING LIMITS RESET

If a mistake is made while programming the limits press the reset button to start over.

OPERATOR ALARM

If a contact sensor detects an obstruction twice consecutively the alarm will sound (up to 5 minutes) and the operator will need to be reset.

When the inherent force of the operator (RPM/current sensor) detects the following (twice consecutively) the alarm will sound (up to 5 minutes) and the operator will need to be reset:



A. The operator arm or gate is incorrectly installed.

B. The gate does not meet specifications.

C. Gate hinges are too tight or broken and the gate is not moving freely.

D. The gate is moving and a car pushes the gate.

E. A foreign object is on the gate frame while the gate is moving.

F. The gate hits the driveway, curb or other, and gets stuck or bent in an awkward position.

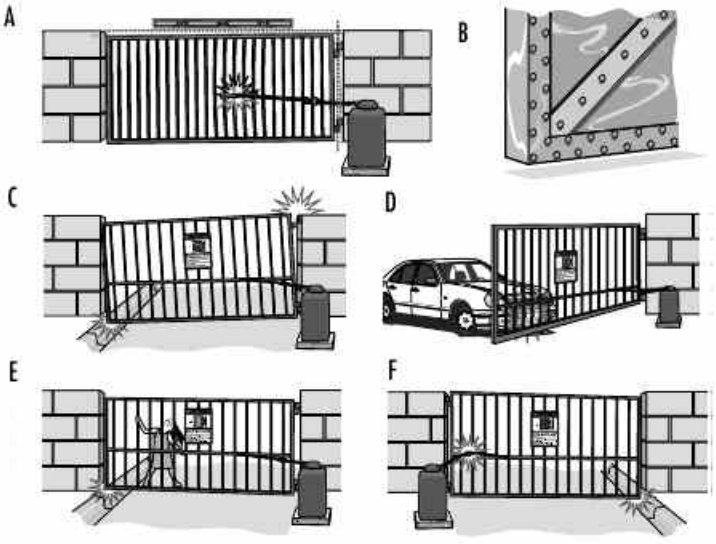

Remove any obstructions. Press the reset button to shut off the alarm and reset the operator. After the operator is reset, normal functions will resume.

NOTE: *In dual gate applications the reset button must be pressed on the primary operator.*

REMOTE CONTROL

Once the remote control has been programmed operator will operate as follows:

When gate is in the closed position, activation of the remote control button will open the gate. During the open cycle another activation of the remote control will stop the gate and the next activation of the remote control will close the gate.

When the gate is in the open position, activation of the remote control button will close the gate.

SLEEP MODE

The operator enters sleep mode 15 seconds after the last command is given. The diagnostic LED will blink in this mode. The photoelectric sensor indicator LEDs will not be on. The next command given will return the operator to normal operation.

MAINTENANCE

Disconnect all power to the operator before servicing.

DESCRIPTION	TASK	MONTH	CHECK AT LEAST ONCE EVERY 6 MONTHS	3 YEARS
External Entrapment Protection System	Check and test for proper operation	X		
Photoelectric Sensors	Check and test for proper operation	X		
Warning Signs	Make sure they are present	X		
Manual Disconnect	Check and test for proper operation		X	
Sprockets and Chains	Check for excessive slack and lubricate		X	
Gate	Inspect for wear or damage	X		
Accessories	Check all for proper operation		X	
Electrical	Inspect all wire connections		X	
Chassis Mounting Bolts	Check for tightness		X	
Operator	Inspect for wear or damage		X	
Batteries	Replace			X

NOTES:

- *Severe or high cycle usage will require more frequent maintenance checks.*
- *It is suggested that while at the site voltage readings be taken at the operator. Using a digital voltmeter, verify that the incoming voltage to the operator it is within ten percent of the operator's rating.*

BATTERY

The battery should be replaced every three years. Use only LiftMaster part 29-NP712 for replacement batteries. The operator comes with one 7AH battery. A second 7AH (29-NP712) battery may be added or one 33AH (A12330SGLPK) may be used in place of the 7AH batteries. The batteries contain lead and need to be disposed of properly.

TROUBLESHOOTING » DIAGNOSTIC ERROR CODES CHART

The operator is programmed with self-diagnostic capabilities. The diagnostic LED will flash a number of times then pause signifying it has found a potential issue. Consult Diagnostic Error Codes Chart below.

CONTINUOUS FLASHES (HEARTBEAT) POWER ON	Operator is in sleep mode - Normal Operation
2 FLASHES STOP NOT CONNECTED	Stop is not connected. • Party Mode may be activated. • Check to make sure the jumper wire is connected between the COM and STOP input on the control board. Stop is an NC (normally closed) input.
3 FLASHES LOW BATTERY VOLTAGE	Battery voltage is below the recommended operating level. • Battery may not be properly charged. Disconnect all batteries and make sure AC power or solar power is connected. Verify AC power outlet. • Verify that the battery fuses are intact and not blown. Replace blown fuses with same type and rating. • Batteries are no longer capable of holding a charge due to age or excessive depleting of the battery. Replace the batteries (see accessories). Dispose of old batteries properly.
4 FLASHES LOW BATTERY CAPACITY	Battery does not have the capacity to operate the gate operator. • Battery may not be properly charged. Disconnect all batteries and make sure AC power or solar power is connected. Verify AC power outlet. • Verify that the battery fuses are intact and not blown. Replace blown fuses with same type and rating. • Batteries are no longer capable of holding a charge due to age or excessive depleting of the battery. Replace the batteries (see accessories page). Dispose of old batteries properly.
5 FLASHES RPM REVERSAL GATE 1 OR IN MANUAL RELEASE MODE. WIRING TO THE OPERATOR IS DISCONNECTED OR DAMAGED	Gate 1 has encountered an obstruction or the wiring is disconnected, damaged or miswired. • Make sure the path of the gate is clear and the gate moves freely. • Incorrect or bad connection to Gate 1. Check the green and white wires on the motor to make sure connections are correct and secure. • Bad control board.
6 FLASHES FORCE REVERSAL GATE 1	Gate 1 has encountered an obstruction. • Make sure the path of the gate is clear and the gate moves freely. • If there is no obstruction the force adjustment is set too low. Increase the force setting and verify that the gate moves without reversing and will reverse if an obstruction is encountered.
7 FLASHES RPM REVERSAL GATE 2 OR WIRING TO THE OPERATOR IS DISCONNECTED OR DAMAGED	Gate 2 has encountered an obstruction or the wiring to the motor is disconnected, damaged or miswired. • Make sure the path of the gate is clear and the gate moves freely. • Incorrect or bad connection to Gate 2. Check the green and white wires on the motor to make sure connections are correct and secure. • Bad control board. Press the LEARN LIMITS button and press the GATE 2 buttons to move the gate. If the gate does not move continuously, disconnect the gate from Gate 2 and connect the to the Gate 1 connector and repeat the attempt to move the gate. If the gate does not move continuously on either Gate 1 or 2, replace the control board.
8 FLASHES FORCE REVERSAL GATE 2	Gate 2 has encountered an obstruction. • Make sure the path of the gate is clear and the gate moves freely. • If there is no obstruction the force adjustment is set too low. Increase the force setting and verify that the gate moves without reversing and will reverse if an obstruction is encountered.
9-11 FLASHES POTENTIAL CHIP FAILURE	Potential RAM, Flash, or EEPROM failure. • Turn power off and on. • If problem is not resolved by turning the power off and on, replace the control board.

OPERATOR DOES NOT RUN. DIAGNOSTIC LED NOT ON.	• Power not connected. Make sure the AC/Solar input is connected and that at least one battery is connected with the corresponding fuse intact. • Low or defective battery. Check the battery to make sure that the red wire goes to the positive terminal of the battery and the black wire goes to the negative terminal of the battery. Replace the battery if the open circuit voltage is below 11.5Vdc. • Bad control board. Replace control board.
OPERATOR POWERS UP BUT DOES NOT OPERATE.	• Low or defective battery. At least one charged battery must be connected for the operator to operate. Verify the battery fuse is intact. Check battery connections and battery voltage to be above 11.5Vdc. Replace batteries if necessary. • STOP button connection loose or disconnected. Press the RESET button and verify that the STOP LED lights up and then turns off after 10 seconds. Verify the wire connects between the STOP and CTRL PWR terminals. • Obstruction blocking photoelectric sensors. Press the RESET button and verify that all the safety LEDs (OPEN EDGE/PHOTO, OPEN PHOTO, CLOSE PHOTO) are OFF. If any are ON, clear any obstructions and verify the LED turns off . ***NOTE:*** *The RESET button may need to be hit multiple times since the LEDs turn off after 10 seconds when the operator goes to sleep.* • (Optional Accessory) Safety edge is damaged or on an obstruction. Press the RESET button and verify that the Safety LEDs (OPEN EDGE and CLOSE EDGE/PHOTO) are OFF. If either is ON, clear any obstructions and verify the LED turns off. ***NOTE:*** *The RESET button may need to be hit multiple times since the LEDs turn off after 10 seconds when the operator goes to sleep.* • (Optional Accessory) Interrupt loop or Shadow loop is obstructed. Press the RESET button and verify that the INTERRUPT and SHADOW LEDs are OFF. If either is on, check the loop detector and its wiring to ensure that it is not incorrectly being triggered. • Bad control board. Replace control board. • Battery not connected. At least one charged battery must be connected for the operator to operate. Verify battery fuse is intact. Check battery connections and battery voltage to be above 11.5V. Replace batteries if necessary. • Verify that all of the wires, especially the wires going to the motor are secure and that the connector is properly mated to the header.
RELAYS "CLICK" WHEN REMOTE CONTROL OR SINGLE BUTTON CONTROL (SBC) COMMAND IS GIVEN, BUT THE OPERATOR DOES NOT MOVE OR GATE DISCONNECTED.	• The gate is jammed or incorrectly installed. Disconnect the gate and verify that the gate moves freely. Enter the Learn Limits mode and verify that the motor spins. Reconnect the gate. Reprogram limits for the operator. • Bad control board. Replace control board.
THE GATE MOVES BUT CANNOT EXIT LEARN LIMITS MODE. CANNOT LEARN LIMITS.	• Disconnect the operator from the gate and make sure that the gate moves freely throughout the full length of travel. • If the limits will not program: 1. Disconnect the operator by releasing the handle on the operator arm. 2. Manually close the gate. 3. Loosen the screw on the learn limit cam and rotate the learn limit cam so it is touching the learn limit switch. Tighten the screw. 4. Tighten the handle on the operator arm. Program the limits again.
GATE DOES NOT FULLY OPEN OR CLOSE WHEN TRYING TO LEARN LIMITS.	• Gate is excessively heavy or hinges are bad. Verify that the gate is within the ratings for this product. Disconnect the operator(s) and verify that the gate(s) swing easily. Lubricate or replace hinges as necessary. • Check the brown and green wires on J17 to ensure they are properly connected. If this did not solve the problem the RPM Module or control board may need to be replaced. Contact technical support.
OPERATOR DOES NOT RESPOND TO SINGLE BUTTON CONTROL (SBC) COMMAND.	• Battery not connected. At least one charged battery must be connected for the operator to operate. Verify the battery fuse is intact. Check battery connections and battery voltage to be above 11.5Vdc. Replace batteries if necessary. • STOP button connection loose or disconnected. Press the RESET button and verify that the STOP LED lights up and then turns off after 10 seconds. Verify the wire connects between STOP and CTRL PWR terminals. • Single Button Control (SBC) button connection loose. Check wiring for SBC button. Use the on-board single button to verify operator will respond. • Bad control board. Replace control board.
OPERATOR DOES NOT RESPOND TO COMMAND.	• Battery not connected. At least one charged battery must be connected for the operator remote control to operate. Verify battery fuse is intact. Check battery connections and battery voltage to be above 11.5Vdc. Replace batteries if necessary. • STOP button connection loose or disconnected. Press the RESET button and verify that the STOP LED lights up and then turns off after 10 seconds. Verify the wire connects between the STOP and CTRL PWR terminals. • Radio module not plugged in. Verify the green Radio module (located next to the coaxial connector) is properly mated with both 4-pin connectors. • If the operator is not grounded properly the range of the remote controls will be reduced. Ensure operator is properly grounded.

OPERATOR DOES NOT RESPOND TO COMMAND.	• Battery not connected. At least one charged battery must be connected for the operator remote control to operate. Verify battery fuse is intact. Check battery connections and battery voltage to be above 11.5Vdc. Replace batteries if necessary. • STOP button connection loose or disconnected. Press the RESET button and verify that the STOP LED lights up and then turns off after 10 seconds. Verify the wire connects between the STOP and CTRL PWR terminals. • Radio module not plugged in. Verify the green Radio module (located next to the coaxial connector) is properly mated with both 4-pin connectors.
GATE STOPS AND REVERSES IMMEDIATELY AFTER IT STARTS MOVING.	• Obstruction sensed. Check safety devices and gate for obstructions. • A fault has occurred. Check Diagnostic LED for possible error codes. • Force set too low. Adjust FORCE setting until gate completes a full open/close cycle without reversing. The force setting may need to be adjusted in cold weather, as the gate will not move freely. • Loops are reversed. Make sure that the Safety loop and Shadow loop are connected properly. The gate may trigger the Shadow loop as it moves, so it must be connected to the correct input. • Low or defective battery. At least one charged battery must be connected for the units to operate. Verify battery fuse is intact. Check battery connections and battery voltage to be above 11.5Vdc. Replace battery if necessary.
GATE OPENS BUT DOES NOT CLOSE.	• An open input is continuously activated. Check the open loop or vehicle probe to make sure they are clear of objects. Verify connections and operation for these devices. • Low battery. Measure the voltage across the battery. Voltage should be above 11.5Vdc. Replace battery if necessary. • (Optional Accessory) Entry system output is connected to the OPEN input, and is "stuck" opening. Verify entry system connections and operations. • Obstruction blocking close photoelectric sensors, shadow loop, or safety loop. Check photoelectric sensors for alignment and verify all connections and operation for safety devices. • (Optional Accessory) Close safety edge is damaged or on an obstruction. Verify operation and connection of close edge.
GATE DOES NOT CLOSE AUTOMATICALLY WITH TIMER TO CLOSE ENABLED.	• Verify that the Timer-to-Close is ON and adjusted to desired delay. • Gate opened by a force obstruction reversal. Check the Diagnostic LED and clear gate path of any obstructions. • The Interrupt loop or Shadow loop is obstructed (optional accessories). • Obstructed close photoelectric sensor or edge (optional accessory). Check connections and operations of safety devices. • Low battery. Measure the voltage across the battery. Voltage should be above 11.5Vdc. Replace battery if necessary.
ALARM CONSTANTLY SOUNDS 5 MINUTES. SOUNDS WHENEVER A COMMAND IS ISSUED.	• An open input is continuously activated. Check the open loop or vehicle probe to make sure they are clear of objects. Verify connections and operation for these devices. • (Optional Accessory) Entry system output is connected to the OPEN input, and is "stuck" opening. Verify entry system connections and operation. • Operator in Party mode after RESET button pressed while at the OPEN limit. Use a remote or the SINGLE BUTTON to close the gate and reopen it. Verify that the TIMER RUNNING LED is flashing. • Double entrapment occurred. Two successive obstructions were encountered while moving the gate. Press the reset button and ensure that the gate path is clear of all obstructions. Check the FORCE setting to make sure it is properly set.
ALARM IS BEEPING 3 TIMES ON A COMMAND GATE RUNS TOO SLOW.	• Low battery. Measure the voltage across the battery. Voltage should be above 11.5Vdc. Replace battery if necessary. • Open and Close Limits are set too close together. If the Open and Close Limits are set within the ramp down distance of each other, the gate will run at slow speed all the time. • The gate is starting within the ramp down distance from the Open or Close Limit. Gate will run slow to limits if motion is started within the ramp-down distance from the limit.
GATE 2 CLOSES BEFORE GATE 1.	• Lock/Bipart Delay not set. Slide the Lock/Bipart Delay switch to ON. Verify that Gate 1 starts moving first on open and last on close. • Gate is excessively heavy. Verify that the gate is within the ratings for this product. Disconnect the operator(s) and verify that both gate(s) operate easily. If the gate(s) are harder to move in one direction verses the other, the gate must be adjusted. • Gate is unbalanced. Disconnect the operator(s) and verify that gate(s) operate easily in both directions. If the gate(s) are harder to move in one direction verses the other, the gate must be adjusted. • Bad motor connection. Check the motor wires and connections for possible loose or corroded terminals.
ALARM BEEPS WHEN RUNNING.	• Low battery. Measure the voltage across the battery. Voltage should be above 11.5Vdc. Replace battery if necessary.

SWING
RSW12V & RSW12VH

⚠ WARNING

To protect against fire and electrocution:
- DISCONNECT power and battery BEFORE installing or servicing operator.

For continued protection against fire:
- Replace ONLY with fuse of same type and rating.

NOTE: *Do not use a maglock and a solenoid lock on the same installation.*

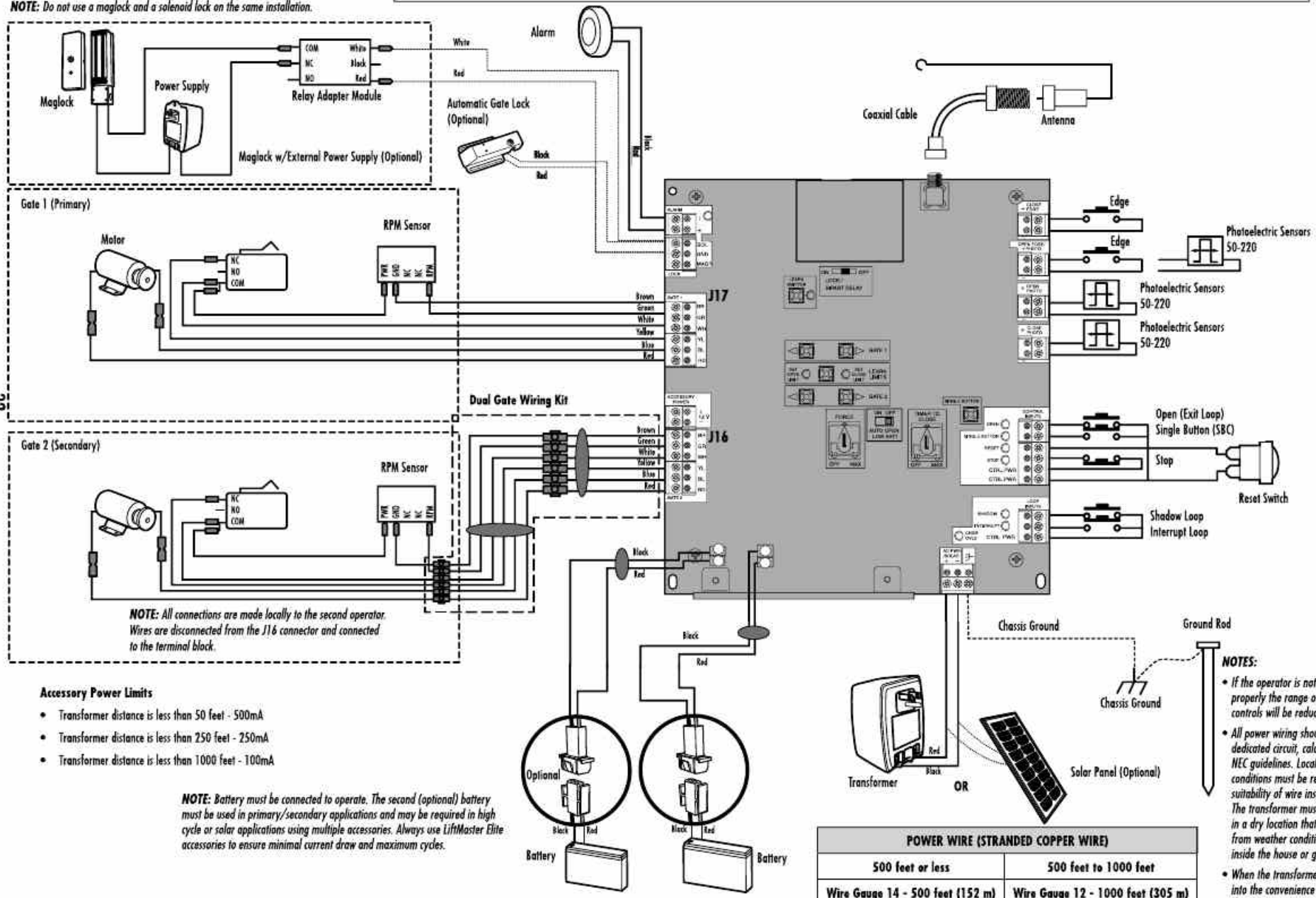

NOTE: *All connections are made locally to the second operator. Wires are disconnected from the J16 connector and connected to the terminal block.*

Accessory Power Limits

- Transformer distance is less than 50 feet - 500mA
- Transformer distance is less than 250 feet - 250mA
- Transformer distance is less than 1000 feet - 100mA

NOTE: *Battery must be connected to operate. The second (optional) battery must be used in primary/secondary applications and may be required in high cycle or solar applications using multiple accessories. Always use LiftMaster Elite accessories to ensure minimal current draw and maximum cycles.*

POWER WIRE (STRANDED COPPER WIRE)	
500 feet or less	500 feet to 1000 feet
Wire Gauge 14 - 500 feet (152 m)	Wire Gauge 12 - 1000 feet (305 m)
Transformer 13.5 Vac	Transformer 14.5 Vac

NOTES:

- *If the operator is not grounded properly the range of the remote controls will be reduced.*
- *All power wiring should be on a dedicated circuit, calculated using NEC guidelines. Local codes and conditions must be reviewed for suitability of wire installation. The transformer must be located in a dry location that is protected from weather conditions, such as inside the house or garage.*
- *When the transformer is plugged into the convenience outlet, use the 13.5V output terminals.*

ACCESSORIES

ENTRAPMENT PROTECTION DEVICES

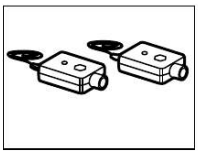

THE PROTECTOR SYSTEM® PHOTOELECTRIC SENSORS

The photoelectric sensors are designed to detect an obstacle in the path of the electronic beam and stop the operator. Includes mounting brackets.

Model 50-220

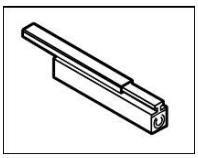

SENSING EDGE (2-WIRE, NON-MONITORED)

Sensing edges can detect an obstacle upon contact and stop the operator.

Models G65MG0204, G65MG0205, G65MGR205, and G65MGS205

SENSING EDGE CHANNEL

Mounting channel for all MG020 type edges.

Model G65ME120C5

REMOTE CONTROLS

Chamberlain offers a variety of LiftMaster Security✚® and Passport™ remote controls to satisfy your application needs. Single-button to 4-button, visor or key chain. Additionally, Passport™ remote controls are ideal for integration with Telephone Entry and Access Control Systems. Contact your authorized LiftMaster dealer for details.

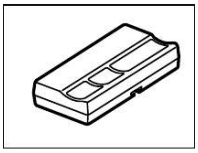

3-BUTTON SECURITY✚® REMOTE CONTROL

The 3-button remote control can be programmed to control the operator. Includes visor clip.

Model 373LM

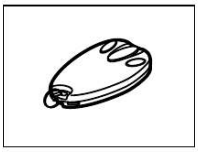

3-BUTTON MINI-REMOTE CONTROL WITH SECURITY✚®

The 3-button remote control can be programmed to control the operator. Includes key ring and fastening strip.

Model 370LM

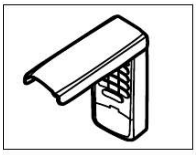

SECURITY✚® KEYLESS ENTRY

Enables homeowner to operate gate operator from outside by entering a 4-digit code on a specially designed keypad.

Model 377LM

MISCELLANEOUS

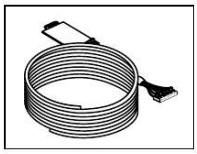

DUAL GATE WIRING KIT

The dual gate wiring kit is 40 feet of interconnecting cable required for dual gate applications.

Model MSWIRE12GA6C

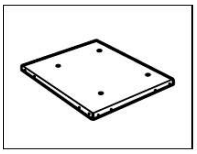

POST-MOUNTING PLATE

For post-mounting model RSW residential swing operator (also CSW200 commercial swing operator). Posts not included.

Model MPEL

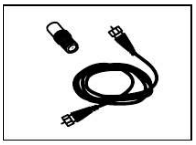

REMOTE ANTENNA EXTENSION KIT

The remote antenna extension kit allows the antenna to be remotely installed.

Model 86LM

Blue-underlined accessories are clickable — order online at GateHouseSupplies.com

ACCESSORIES

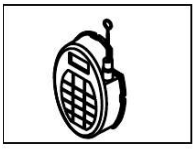

WIRELESS ACCESS CONTROL RECEIVER

Access control receiver for up to 450 Security✚® remote controls.

Model STAR450-315

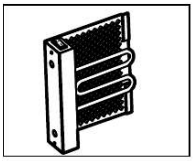

HEATER

Keeps operator, gearbox and batteries at suitable temperature when outside temperature is below 0°F for extended periods of time.

Models HTRKITRSW (for Swing operator, includes bracket for optimal heater location) and G6518CSW (Swing replacement heater only)

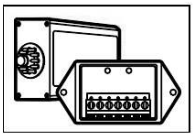

LOOP DETECTOR

Low power loop detectors.

Model LD7LP

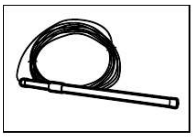

VEHICLE SENSING PROBE

The vehicle sensing probe is buried in the ground and can detect a car as it approaches and will then open the gate.

Model LM202

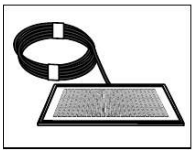

SOLAR PANEL KIT - 10 WATT

This kit is to replace or add a solar panel to the operator application. Up to three solar panels can be connected to the operator.

Model SOLPNL10W12V

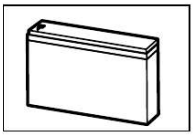

BATTERY FOR GATE ACCESS SYSTEMS

The gate access system battery replaces or adds a battery to the operator application.

Model 29-NP712 (7 AMP-Hour Battery, 12 Vdc, requires additional 7AH battery harness)

Model A12330SGLPK (33 AMP-Hour Battery, 12 Vdc, harness included. Ideal for solar applications and extended battery backup)

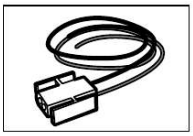

BATTERY HARNESS

Required when a second 7 AMP-Hour, 12 Vdc battery is added to the operator.

Model K94-35225

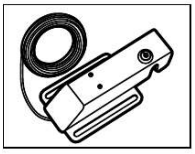

SOLENOID GATE LOCK (LOW POWER)

The automatic gate lock is a solenoid-driven lock that automatically unlocks when the gate is open and locks when the gate is closed. Can be mounted onto a gate or post. Can be released in case of emergency.

Model SGLOCK12V

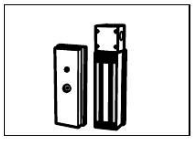

MAGNETIC GATE LOCK

Outdoor magnetic lock, transformer, junction box, mounting plate and hardware. Not for use with Solar Applications. Must be powered separately.

Model MG1300

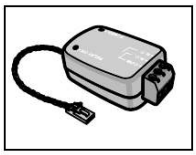

RELAY KIT

Maglock release relay.

Model Q400MAU

Blue-underlined accessories are clickable — order online at GateHouseSupplies.com

WARRANTY

LIFTMASTER THREE YEAR LIMITED WARRANTY

The Chamberlain Group, Inc. warrants to the first purchaser of this product, for the structure in which this product is originally installed, that it is free from defect in materials and/or workmanship for a period of THREE years from the date of purchase. The proper operation of this product is dependent on your compliance with the instructions regarding installation, operation, maintenance and testing. Failure to comply strictly with those instructions will void this limited warranty in its entirety.

If, during the limited warranty period, this product appears to contain a defect covered by this limited warranty, call 1-800-528-2806, toll free, before dismantling this product. Then send this product, pre-paid and insured, to our service center for warranty repair. You will be advised of shipping instructions when you call. Please include a brief description of the problem and a dated proof-of purchase receipt with any product returned for warranty repair. Products returned to Seller for warranty repair, which upon receipt by Seller are confirmed to be defective and covered by this limited warranty, will be repaired or replaced (at Seller's sole option) at no cost to you and returned pre-paid. Defective parts will be repaired or replaced with new or factory-rebuilt parts at Seller's sole option.

ALL IMPLIED WARRANTIES FOR THE PRODUCT, INCLUDING BUT NOT LIMITED TO ANY IMPLIED WARRANTIES OF MERCHANTABILITY AND FITNESS FOR A PARTICULAR PURPOSE, ARE LIMITED IN DURATION TO THE TWO YEAR LIMITED WARRANTY PERIOD SET FORTH ABOVE, AND NO IMPLIED WARRANTIES WILL EXIST OR APPLY AFTER SUCH PERIOD. Some states do not allow limitations on how long an implied warranty lasts, so the above limitation may not apply to you. THIS LIMITED WARRANTY DOES NOT COVER NON-DEFECT DAMAGE, DAMAGE CAUSED BY IMPROPER INSTALLATION, OPERATION OR CARE (INCLUDING, BUT NOT LIMITED TO ABUSE, MISUSE, FAILURE TO PROVIDE REASONABLE AND NECESSARY MAINTENANCE, UNAUTHORIZED REPAIRS OR ANY ALTERATIONS TO THIS PRODUCT), LABOR CHARGES FOR REINSTALLING A REPAIRED OR REPLACED UNIT, OR REPLACEMENT OF BATTERIES.

THIS LIMITED WARRANTY DOES NOT COVER ANY PROBLEMS WITH, OR RELATING TO, THE GATE OR GATE HARDWARE, INCLUDING BUT NOT LIMITED TO THE GATE SPRINGS, GATE ROLLERS, GATE ALIGNMENT OR HINGES. THIS LIMITED WARRANTY ALSO DOES NOT COVER ANY PROBLEMS CAUSED BY INTERFERENCE. ANY SERVICE CALL THAT DETERMINES THE PROBLEM HAS BEEN CAUSED BY ANY OF THESE ITEMS COULD RESULT IN A FEE TO YOU.

UNDER NO CIRCUMSTANCES SHALL SELLER BE LIABLE FOR CONSEQUENTIAL, INCIDENTAL OR SPECIAL DAMAGES ARISING IN CONNECTION WITH USE, OR INABILITY TO USE, THIS PRODUCT. IN NO EVENT SHALL SELLER'S LIABILITY FOR BREACH OF WARRANTY, BREACH OF CONTRACT, NEGLIGENCE OR STRICT LIABILITY EXCEED THE COST OF THE PRODUCT COVERED HEREBY. NO PERSON IS AUTHORIZED TO ASSUME FOR US ANY OTHER LIABILITY IN CONNECTION WITH THE SALE OF THIS PRODUCT.

Some states do not allow the exclusion or limitation of consequential, incidental or special damages, so the above limitation or exclusion may not apply to you. This limited warranty gives you specific legal rights, and you may also have other rights which vary from state to state.

845 Larch Avenue
Elmhurst, Illinois 60126-1196

01-34926E

© 2010, The Chamberlain Group, Inc. – All Rights Reserved